CHASSIS ELECTRICAL

CONTENTS

BATTERY 4
- SERVICE SPECIFICATION 4
- ON-VEHICLE SERVICE 4
  - Fluid Level and Specific Gravity Check 4
  - Charging 5
  - Battery Testing Procedure 6

IGNITION SWITCH AND IMMOBILIZER SYSTEM* 7
- SPECIAL TOOL 7
- TROUBLESHOOTING 7

IGNITION SWITCH AND IMMOBILIZER SYSTEM 12

COMBINATION METERS 16
- SERVICE SPECIFICATIONS 16
- SEALANT 17
- SPECIAL TOOLS 17
- TROUBLESHOOTING 18

CONTINUED ON NEXT PAGE

WARNINGS REGARDING SERVICING OF SUPPLEMENTAL RESTRAINT SYSTEM (SRS) EQUIPPED VEHICLES

WARNING!

(1) Improper service or maintenance of any component of the SRS, or any SRS-related component, can lead to personal injury or death to service personnel (from inadvertent firing of the air bag) or to the driver and passenger (from rendering the SRS inoperative).

(2) Service or maintenance of any SRS component or SRS-related component must be performed only at an authorized MITSUBISHI dealer.

(3) MITSUBISHI dealer personnel must thoroughly review this manual, and especially its GROUP 52B – Supplemental Restraint System (SRS) before beginning any service or maintenance of any component of the SRS or any SRS-related component.

NOTE

The SRS includes the following components: SRS-ECU, SRS warning lamp, air bag module, clock spring and interconnecting wiring. Other SRS-related components (that may have to be removed/installed in connection with SRS service or maintenance) are indicated in the table of contents by an asterisk (*).

ON-VEHICLE SERVICE 22
Speedometer Check 22
Tachometer Check 22
Fuel Gauge Unit Check 23
Fuel Level Warning Switch Check 24
Engine Coolant Temperature Gauge Unit Check 24
COMBINATION METERS 25
HEADLAMP, FRONT TURN-SIGNAL LAMP AND FRONT FOG LAMP 27
SERVICE SPECIFICATIONS 27
SPECIAL TOOLS 27
TROUBLESHOOTING 28
ON-VEHICLE SERVICE 34
Headlamp Aiming 34
Headlamp Intensity Measurement 35
Front Fog Lamp Aiming 36
Bulb Replacement 37
HEADLAMP, FRONT TURN-SIGNAL LAMP AND FRONT FOG LAMP 38
SIDE TURN-SIGNAL LAMP 41
SPECIAL TOOL 41
ROOM LAMP 42
SPECIAL TOOLS 42
TROUBLESHOOTING 43
REAR COMBINATION LAMP 46
SPECIAL TOOLS 46
TROUBLESHOOTING 46
REAR COMBINATION LAMP 46
HIGH-MOUNTED STOP LAMP AND LICENCE PLATE LAMP 47
COLUMN SWITCH 48
RHEOSTAT <Vehicles for Australia and New Zealand> 49
SPECIAL TOOL 49
RHEOSTAT 49
HAZARD WARNING LAMP SWITCH 50
HORN 51
CIGARETTE LIGHTER 51
ACCESSORY SOCKET 52
CLOCK 53
SPECIAL TOOL 53
CLOCK 53
RADIO AND TAPE PLAYER 54
TROUBLESHOOTING 54
Quick-reference Troubleshooting Chart 54
RADIO AND TAPE PLAYER 67
CD AUTOCHANGER 68
SPEAKER 69
ANTENNA 70
REAR WINDOW DEFOGGER 71
ON-VEHICLE SERVICE 71
Printed-heater Line Check 71
Rear Window Defogger Relay Continuity Check 71

CONTINUED ON NEXT PAGE

REAR WINDOW DEFOGGER SWITCH ... 72

SMART WIRING SYSTEM (SWS) 73

COMMUNICATION LINE 73

SPECIAL TOOLS 73

TROUBLESHOOTING 74

RADIATOR FAN MOTOR ..... Refer to GROUP 14

SERVICE BRAKES (ABS) ..... Refer to GROUP 35B

DOOR GLASS AND REGULATOR (POWER WINDOWS) ..... Refer to GROUP 42

DOOR HANDLE AND LATCH (DOOR LOCKING) ..... Refer to GROUP 42

SUNROOF ..... Refer to GROUP 42

WINDSHIELD WIPER AND WASHER ..... Refer to GROUP 51

REAR WIPER AND WASHER ..... Refer to GROUP 51

DOOR MIRROR (ELECTRONIC CONTROLLED DOOR MIRROR) ..... Refer to GROUP 51

SUPPLEMENTAL RESTRAINT SYSTEM (SRS) ..... Refer to GROUP 52B

HEATER ..... Refer to GROUP 55

AIR CONDITIONER ..... Refer to GROUP 55

BATTERY

SERVICE SPECIFICATION

Item	Specification
Specific gravity of the battery fluid	1.220 – 1.290 [20°C]

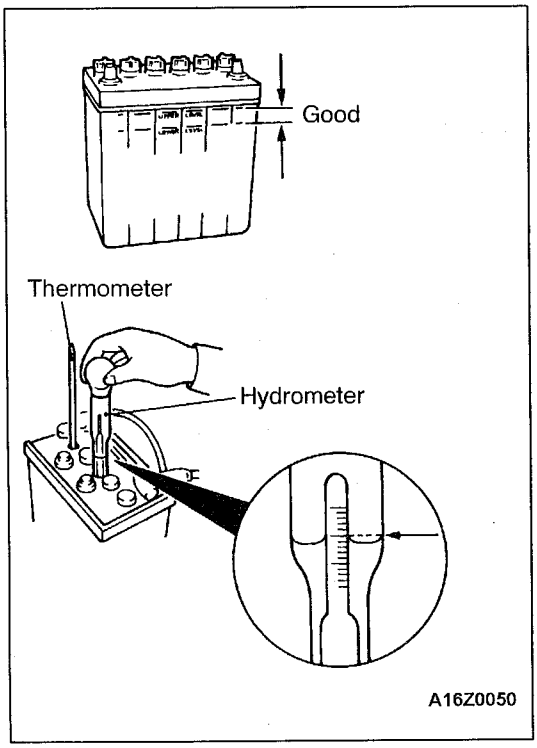

ON-VEHICLE SERVICE

FLUID LEVEL AND SPECIFIC GRAVITY CHECK

1. Inspect whether or not the battery fluid is between the UPPER LEVEL and LOWER LEVEL marks.
2. Use a hydrometer and thermometer to check the specific gravity of the battery fluid.

   Standard value: 1.220 – 1.290 [20°C]

   The specific gravity of the battery fluid varies with the temperature, so use the following formula to calculate the specific gravity for 20°C. Use the calculated value to determine whether or not the specific gravity is satisfactory.

   D20 = (t–20) × 0.0007 + Dt

   D20: Specific gravity of the battery fluid calculated for 20°C.

   Dt: Actually measured specific gravity

   t: Actually measured temperature

CHARGING

1. When charging a battery while still installed in the vehicle, disconnect the battery cables to prevent damage to electrical parts.
2. The current normally used for charging a battery should be approximately 1/10th of the battery capacity. When performing a quick-charging due to lack of time, etc., the charging current should never exceed the battery capacity as indicated in amperes.

Battery type	Capacity (5 HR)	Normal charging current	Quick-charging current
55D23L	53 Ah	5.3 A	53 A
75D23L	52 Ah	5.2 A	52 A

3. Determining if charging is completed.
   (1) If the specific gravity of the battery fluid reaches 1.250 – 1.290 and remains constant for at least one hour.
   (2) If the voltage of each cell reaches 2.5 – 2.8 V and remains constant for at least one hour.

Caution
(1) Remove the battery caps during charging.
(2) Be careful since the battery fluid level may rise during charging.
(3) Keep all sources of fire away while charging because there is a danger of explosion.
(4) Be careful not to do anything that could generate sparks while charging.
(5) When charging is completed, replace the battery caps, pour clean water over the battery to remove any sulfuric acid and dry.
(6) Perform the charging in the well-ventilated place.
(7) Do not raise the battery fluid temperature more than approximately 45°C (In case of quick-charging: approximately 55°C).

BATTERY TESTING PROCEDURE

TEST STEP

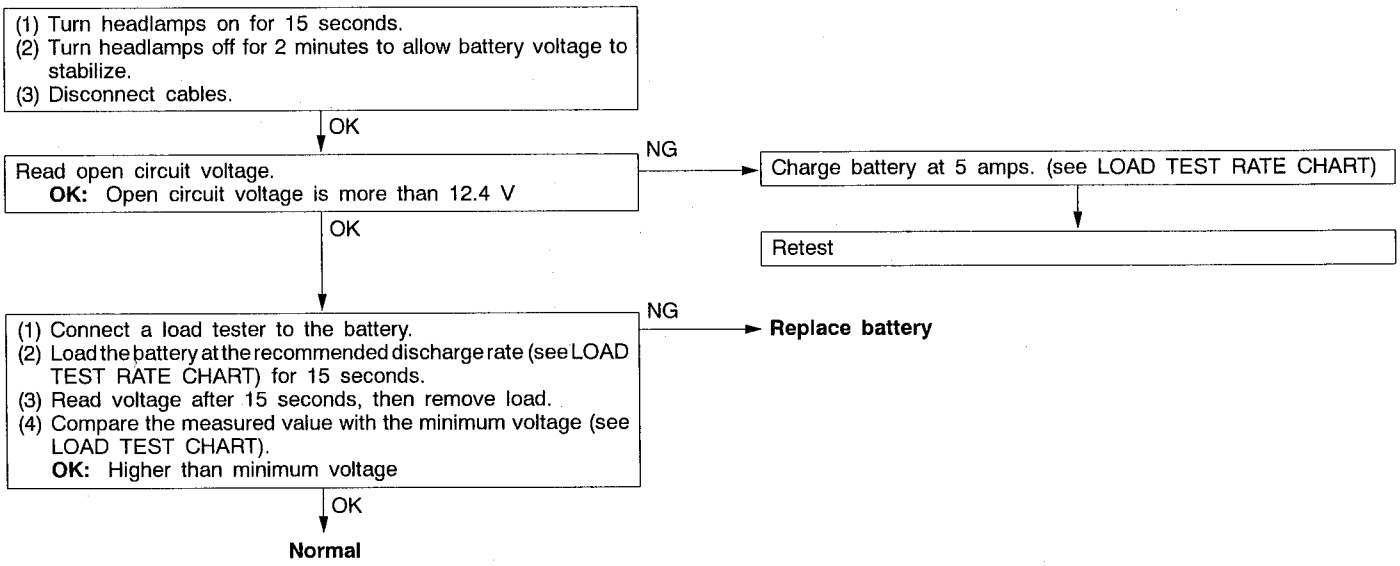

LOAD TEST RATE CHART

Battery type	55D23L	75D23L
Charging time when fully discharged h [5-amp rated current charging]	11	11
Load test (Amps)	260	260

LOAD TEST CHART

Temperature °C	21 and above	16	10	4	–1	–7	–12	–18
Minimum voltage V	9.6	9.5	9.4	9.3	9.1	8.9	8.7	8.5

IGNITION SWITCH AND IMMOBILIZER SYSTEM

SPECIAL TOOL

Tool	Number	Name	Use
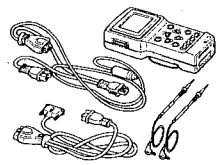	MB991502	MUT-II sub assembly	• Immobilizer system check (Diagnosis display using the MUT-II) • Registration of the encrypted code

TROUBLESHOOTING

Caution
The encrypted code should always be re-registered when replacing the immobilizer-ECU.

STANDARD FLOW OF DIAGNOSIS TROUBLESHOOTING

Refer to GROUP 00 – How To Use Troubleshooting/Inspection Service Points.

DIAGNOSIS FUNCTION

DIAGNOSIS CODES CHECK

Refer to GROUP 00 – How To Use Troubleshooting/Inspection Service Points.

ERASING DIAGNOSIS CODES

Refer to GROUP 00 – How To Use Troubleshooting/Inspection Service Points.

Caution
The diagnosis codes which result from disconnecting the battery cables cannot be erased.

INSPECTION CHART FOR DIAGNOSIS CODES

Diagnosis code No.	Inspection items	Reference page
11	Transponder communication system	54-8
12	Encrypted code are not the same or are not registered	54-8

INSPECTION PROCEDURE FOR DIAGNOSIS CODES

Code No. 11 Transponder communication system	Probable cause
The encrypted code of the transponder is not sent to the immobilizer-ECU immediately after the ignition switch is turned to the ON position.	• Malfunction of the transponder • Malfunction of the ignition key ring antenna • Malfunction of the immobilizer-ECU

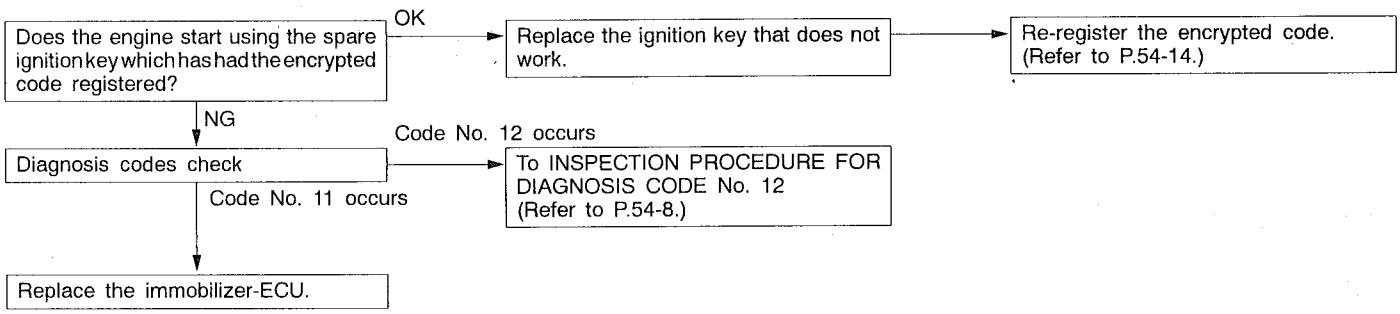

Code No. 12 Encrypted code are not the same or are not registered	Probable cause
The encrypted code which is sent from the transponder is not the same as the encrypted code which is registered in the immobilizer-ECU.	• The encrypted code in the ignition key being used has not been properly registered. • Malfunction of the immobilizer-ECU

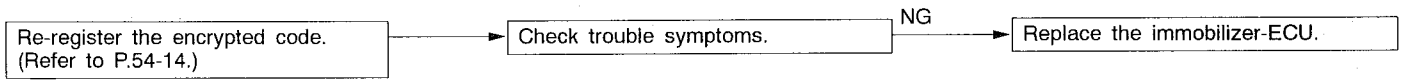

INSPECTION CHART FOR TROUBLE SYMPTOMS

Trouble symptom	Inspection procedure No.	Reference page
Communication with MUT-II is impossible.	–	GROUP 13B, 13C – Troubleshooting
Diagnosis code No. 54 has been generated by the engine-ECU.	1	54-9
Encrypted code cannot be registered using the MUT-II.	2	54-9
Engine does not start (Cranking but no initial combustion).	3	54-10
Malfunction of the immobilizer-ECU power supply and earth circuit	4	54-10

INSPECTION PROCEDURE FOR TROUBLE SYMPTOMS

Inspection Procedure 1

Diagnosis code No. 54 has been generated by the engine-ECU.	Probable cause
There is a problem with communication between the engine-ECU and the immobilizer-ECU.	• Malfunction of harness or connector • Malfunction of the immobilizer-ECU • Malfunction of the engine-ECU

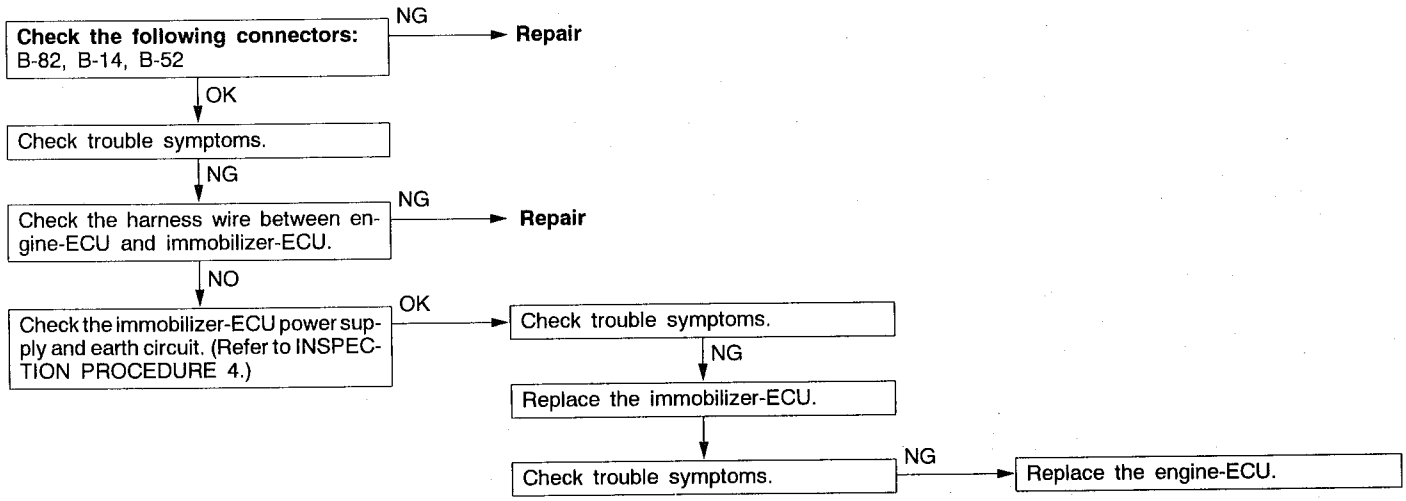

Inspection Procedure 2

Encrypted code cannot be registered using the MUT-II.	Probable cause
The cause is probably that there is no encrypted code registered in the immobilizer-ECU, or there is a malfunction of the immobilizer-ECU.	• Malfunction of the transponder • Malfunction of the ignition key ring antenna • Malfunction of harness or connector • Malfunction of the immobilizer-ECU

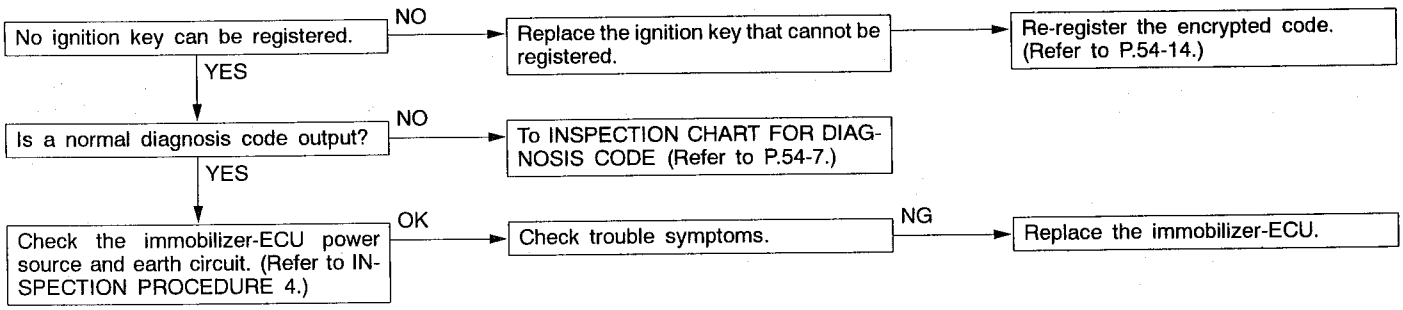

Inspection Procedure 3

Engine does not start (cranking but no initial combustion).	Probable cause
If the fuel injectors are not operating, there might be a problem with the MPI system in addition to a malfunction of the immobilizer system. It is normal for this to occur if an attempt is made to start the engine using a key that has not been properly registered.	• Malfunction of the MPI system • Malfunction of the immobilizer-ECU

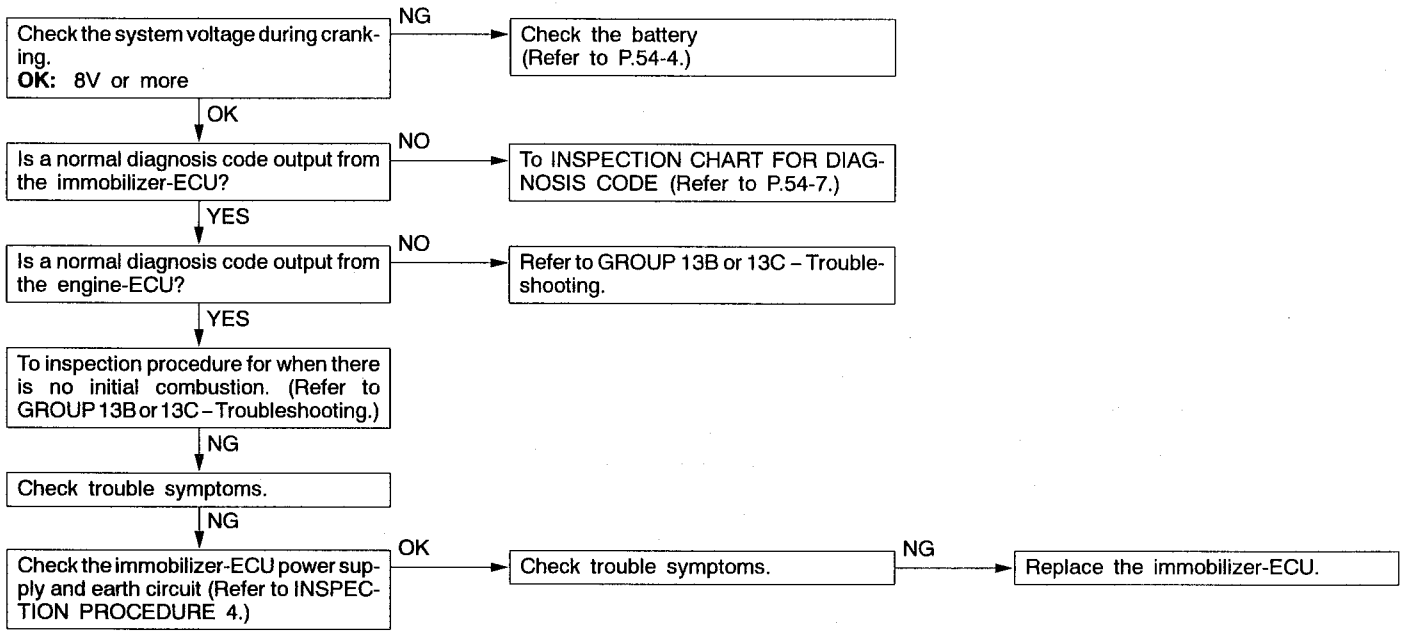

Inspection Procedure 4

Malfunction of the immobilizer-ECU power supply and earth circuit

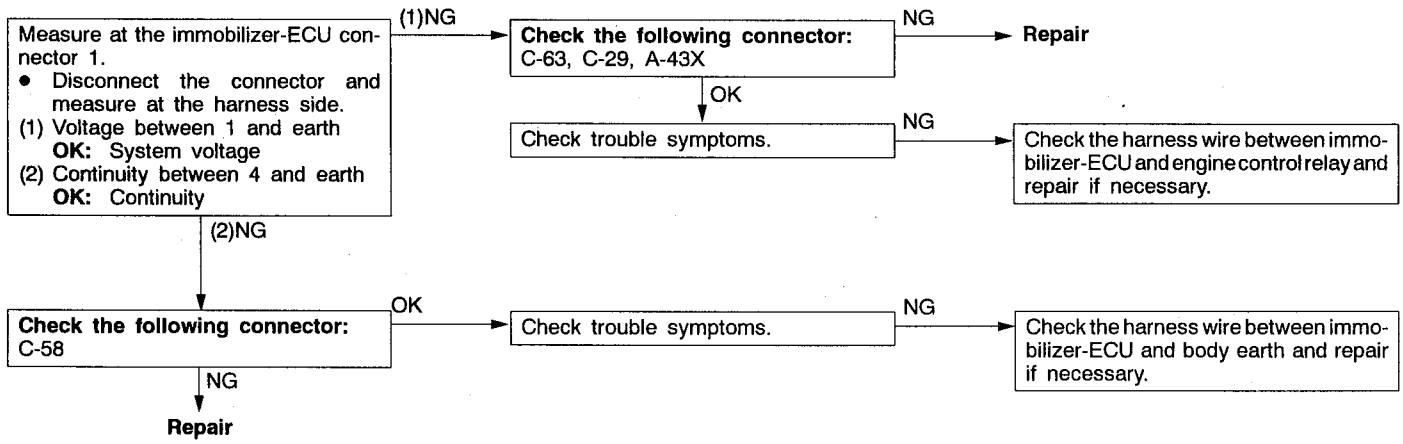

CHECK AT IMMOBILIZER-ECU

TERMINAL VOLTAGE CHECK CHART

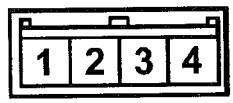

W0599AE

Terminal No.	Signal	Checking requirements	Terminal voltage
1	Immobilizer-ECU power supply	Ignition switch: ON	System voltage
2	–	–	–
3	Engine-ECU	–	–
4	Immobilizer-ECU earth	Always	0 V

IGNITION SWITCH AND IMMOBILIZER SYSTEM

REMOVAL AND INSTALLATION

Caution: SRS
Before removal of air bag module and clock spring, refer to GROUP 52B – Service Precautions and Air Bag Module and Clock Spring.

Pre-removal and Post-installation Operation
- Clock Spring and Column Switch Removal and Installation (Refer to GROUP 52B – Air Bag Modules and Clock Spring.)

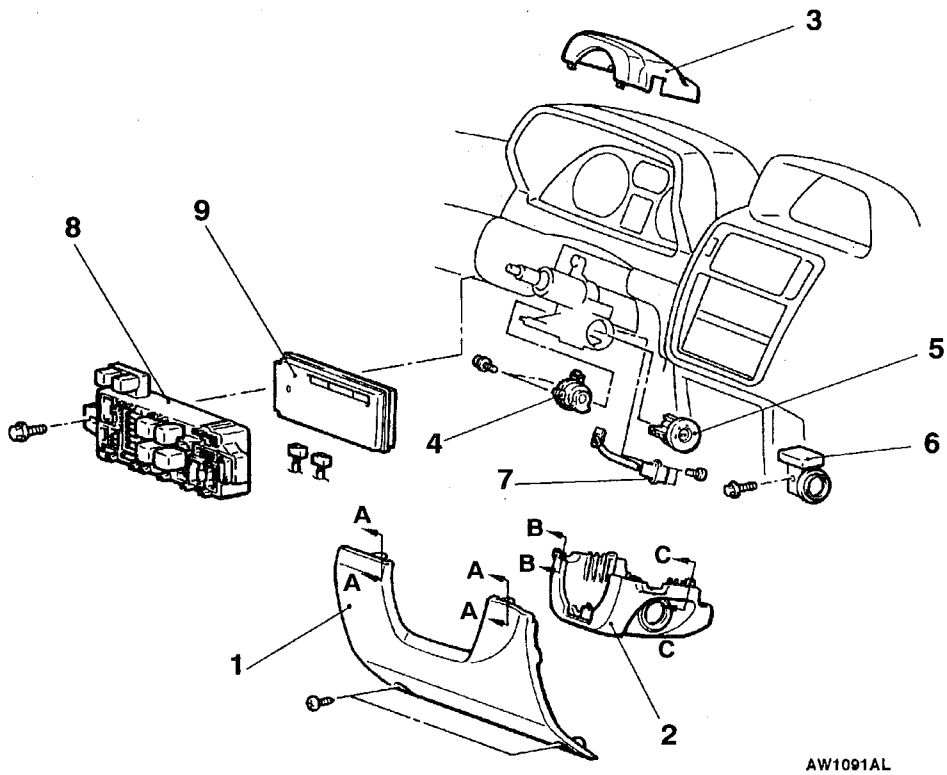

AW1091AL

Section A – A

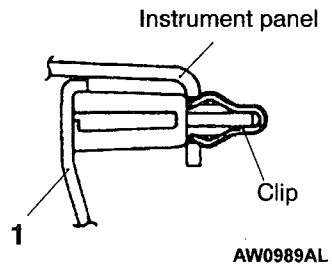

AW0989AL

Section B – B

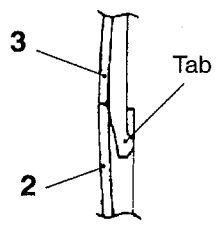

W1109AL

Section C – C

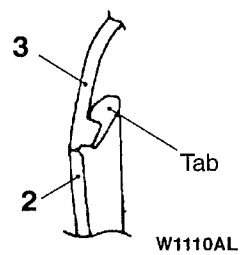

W1110AL

Ignition switch removal steps

1. Instrument under cover
2. Column cover, lower
3. Column cover, upper
4. Ignition switch
◀A▶ 5. Steering lock cylinder
6. Immobilizer-ECU <Vehicles for Australia, New Zealand and South Africa>
7. Key reminder switch

ETACS-ECU removal steps

- Instrument panel assembly (Refer to GROUP 52A – Instrument Panel.)

8. Junction block
9. ETACS-ECU

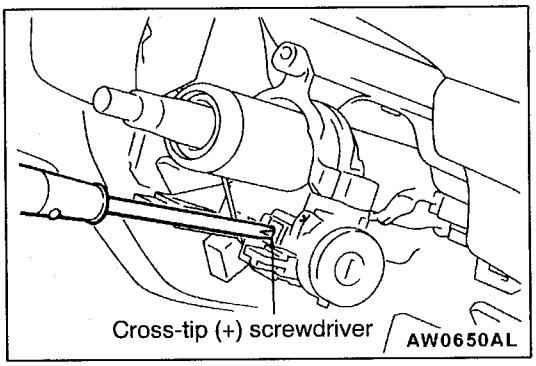

REMOVAL SERVICE POINTS

◀A▶ STEERING LOCK CYLINDER REMOVAL

1. Insert the key in the steering lock cylinder and turn it to the "ACC" position.
2. Using a cross-tip (+) screwdriver (small) or a similar tool, push the lock pin of the steering lock cylinder inward and then pull the steering lock cylinder toward you.

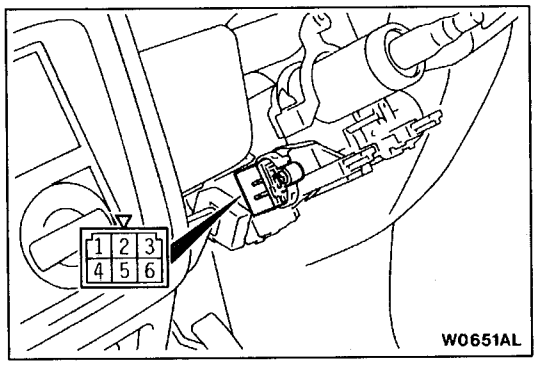

INSPECTION

IGNITION SWITCH CONTINUITY CHECK

1. Remove the column cover lower and upper.
2. Disconnect the wiring connector from the ignition switch.
3. Operate the switch, and check the continuity between the terminals.

Ignition key position	Terminal No.				
	1	2	4	5	6
LOCK					
ACC	○				○
ON	○	○	○		○
START	○	○		○	

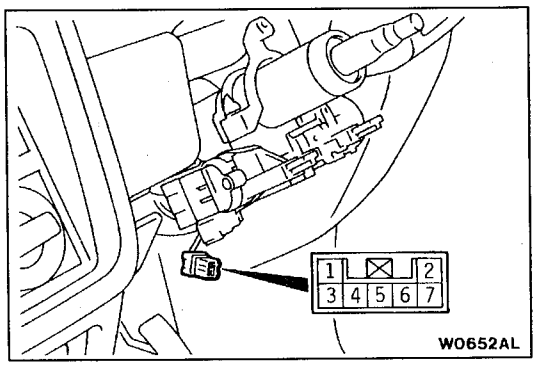

KEY REMINDER SWITCH CONTINUITY CHECK

Disconnect the key reminder switch connector with the switch attached to the vehicle, and then check the continuity between the terminals.

Ignition key	Terminal No.	
	4	6
Removed	○	○
Inserted		

ENCRYPTED CODE REGISTRATION METHOD AND RESETTING THE CODE TO THE FACTORY SETTING

Register the encrypted code in the immobilizer-ECU and then reset the code to the factory setting after parts have been replaced.

Replacement part	Encrypted code
Ignition key	Necessary
Ignition key ring antenna and immobilizer-ECU	Necessary
Engine-ECU*	Necessary

NOTE
*: If the engine-ECU is replaced, the ignition key ring antenna and immobilizer-ECU and ignition key should be replaced together with it.
Each engine-ECU has an individual information for immobilizer-ECU, and the individual information is registered in the immobilizer-ECU.

ENCRYPTED CODE REGISTRATION METHOD

If using an ignition key that has just been newly purchased, or if the immobilizer-ECU has been replaced, you will need to register the encrypted codes for each ignition key being used into the immobilizer-ECU. (A maximum of eight different encrypted codes can be registered.)
Moreover, when the immobilizer-ECU has been replaced, you will need to use the MUT-II to input the vehicle secret code and to register the password (secret code) that the user specifies into the immobilizer-ECU. (Refer to the "MUT-II REFERENCE MANUAL" or "MUT-II OPERATING INSTRUCTIONS")

Caution
If registering of the encrypted codes is carried out after all previously-registered codes have been erased, you should have ready all of the ignition keys that have already been registered.

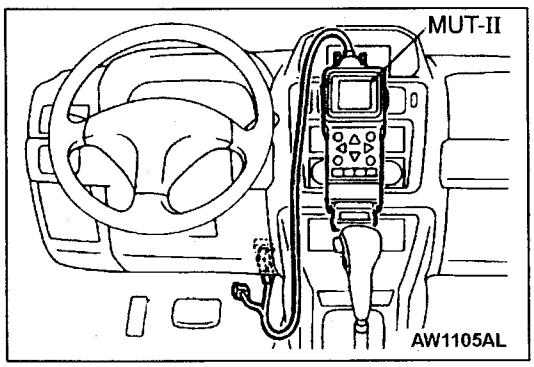

1. Connect the MUT-II to the diagnosis connector.

   Caution
   Turn the ignition switch to LOCK (OFF) position before connection or disconnection of the MUT-II.
2. Check that the diagnosis code No.54 is not being generated by the engine-ECU. If it is being generated check according to the Troubleshooting Procedures.
3. Use the ignition key that is to be registered to turn on the ignition switch.

4. Use the MUT-II to register the encrypted code. To register the second or subsequent key, leave the MUT-II connected and remove the first registered key. Within 5 seconds insert the key to be registered and turn on the ignition switch.

   NOTE
   After 5 seconds have elapsed, the key registration must be repeated from the beginning because the key registration mode terminates.
5. This completes the registration operation. Turn the ignition switch to LOCK (OFF) position and wait for approx. 10 seconds.
6. Check that the engine can be started with each of the ignition keys.
7. Check the diagnosis output from engine-ECU, and erase code No.54 if it appears.

COMBINATION METERS

SERVICE SPECIFICATIONS

Items		Items	Standard value
Speedometer indication error km/h(mph)		40 (20)	40 – 48 (20 – 25)
		80 (40)	80 – 92 (40 – 47)
		120 (60)	120 – 136 (60 – 69)
		160 (80)	160 – 180 (80 – 91)
		– (100)	– (100 – 114)
Tachometer indication error r/min		700	±100
		3,000	±150
		5,000	±250
		6,000	±300
Fuel gauge unit resistance Ω	Main	Float point F	1 – 3
		Float point E	49.7 –51.7
	Sub	Float point F	1– 3
		Float point E	55.3 – 57.3
Fuel gauge unit float height mm	Main	A (Float point F)	44.5 –52.5
		B (Float point E)	220.3 – 228.3
	Sub	A (Float point F)	30.4 – 36.4
		B (Float point E)	238.5 – 244.5
Engine coolant temperature gauge unit resistance (at 70°C) Ω			104 ± 13.5
Fuel gauge resistance Ω	Power supply and earth		233.3
	Power supply and fuel gauge		108.3
	Fuel gauge and earth		125.0
Engine coolant temperature gauge resistance Ω	Power supply and earth		178.9
	Power supply and engine coolant temperature gauge		54
	Engine coolant temperature gauge and earth		232.9

SEALANT

Items	Specified sealant	Remark
Engine coolant temperature gauge unit threaded portion	3M Adhesive nut locking No. 4171 or equivalent	Drying sealant

SPECIAL TOOLS

Tool	Number	Name	Use
A 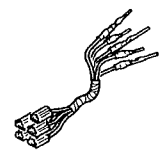 B 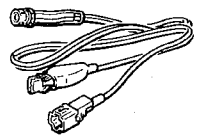 C 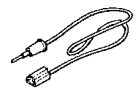 D  C991223	MB991223 A: MB991219 B: MB991220 C: MB991221 D: MB991222	Harness set A: Test harness B: LED harness C: LED harness adapter D: Probe	• Fuel gauge simple check A: Connector pin contact pressure check B: Power circuit check C: Power circuit check D: Commercial tester connection
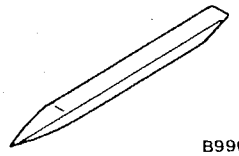 B990784	MB990784	Ornament remover	Removal of meter hood

TROUBLESHOOTING

INSPECTION CHART FOR TROUBLE SYMPTOMS

Trouble symptom	Inspection procedure	Reference page
Speedometer does not work.	1	54-18
Tachometer does not work.	2	54-19
Fuel gauge does not operate.	4	54-20
Engine coolant temperature gauge does not operate.	5	54-21

INSPECTION PROCEDURE FOR TROUBLE SYMPTOMS

Inspection Procedure 1

Speedometer does not work.	Probable cause
The cause may be a defective vehicle speed sensor circuit system or a defective speedometer. Vehicle speed sensor is co-used among the engine-ECU and A/T-ECU.	• Malfunction of vehicle speed sensor • Malfunction of speedometer • Malfunction of harness or connector

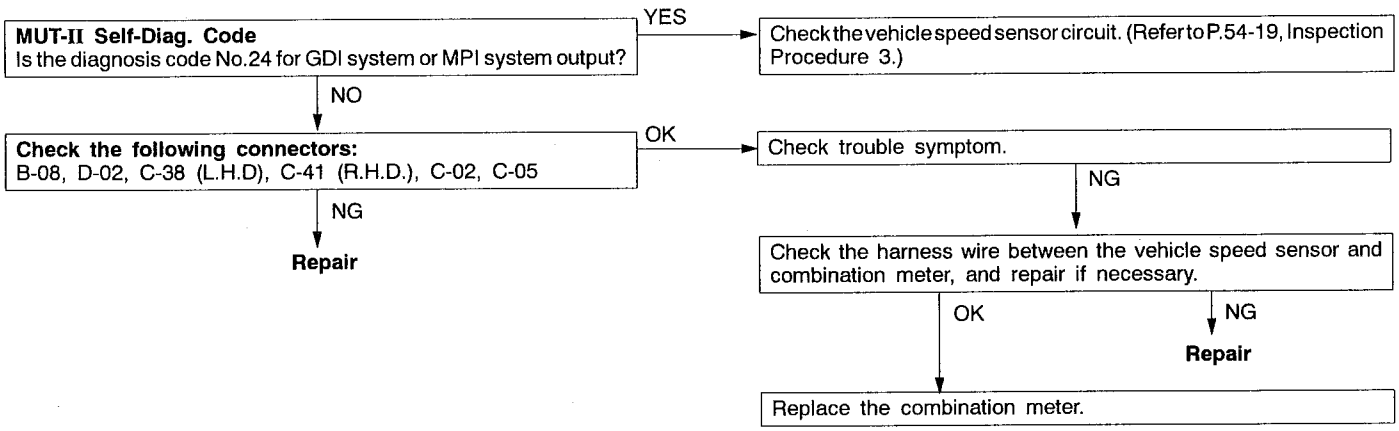

Inspection Procedure 2

Tachometer does not work.	Probable cause
The ignition signal may not be input from the engine, or there may be a malfunction in the power supply or earth circuit.	• Malfunction of tachometer • Malfunction of harness or connector

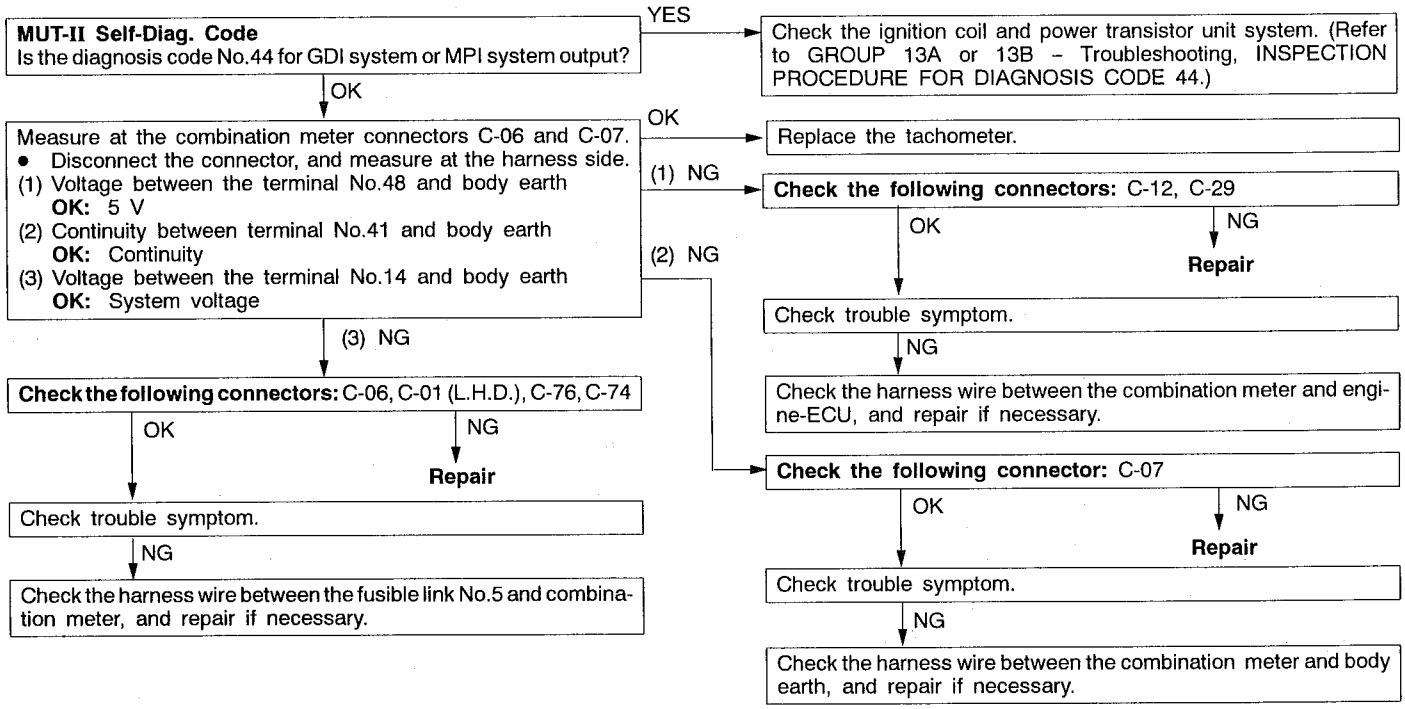

Inspection Procedure 3

Vehicle speed sensor circuit system inspection

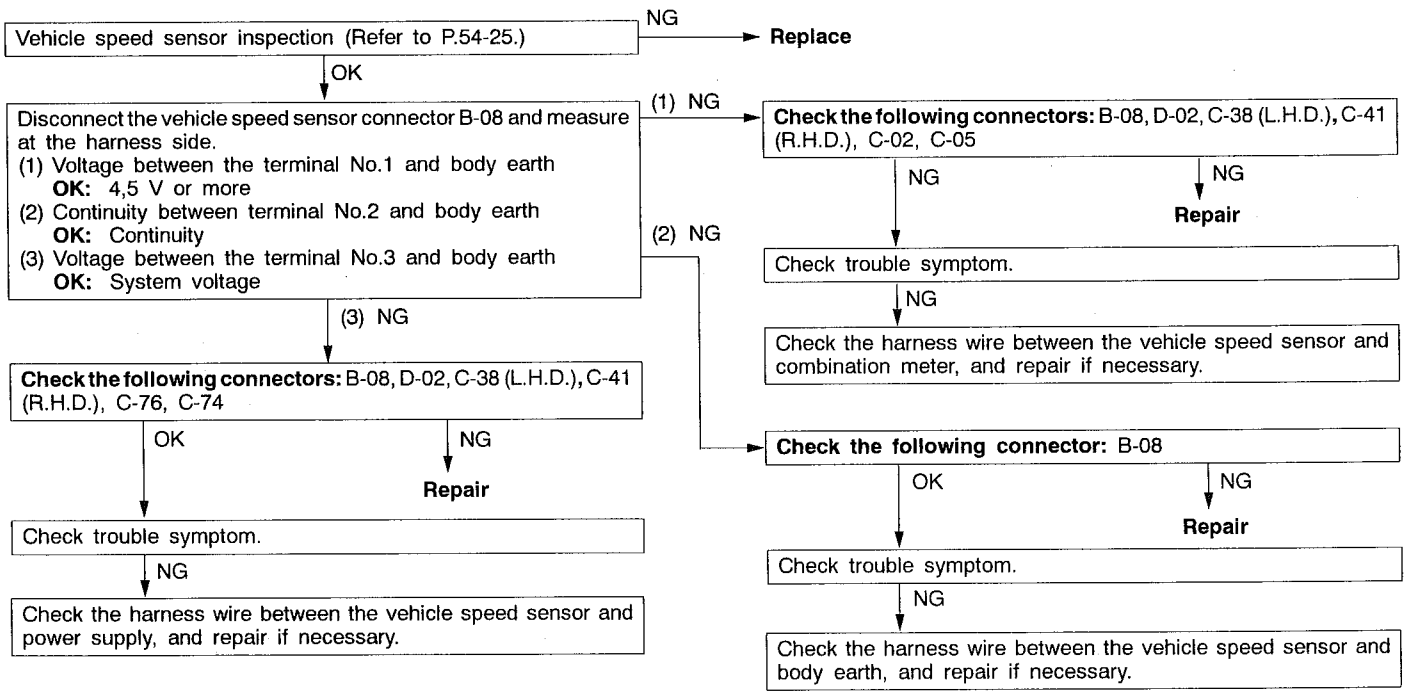

Inspection Procedure 4

Fuel gauge does not operate.	Probable cause
If speedometer and tachometer operate normally, the harness from power supply to combination meter is normal.	• Malfunction of fuel gauge unit • Malfunction of fuel gauge • Malfunction of harness or connector

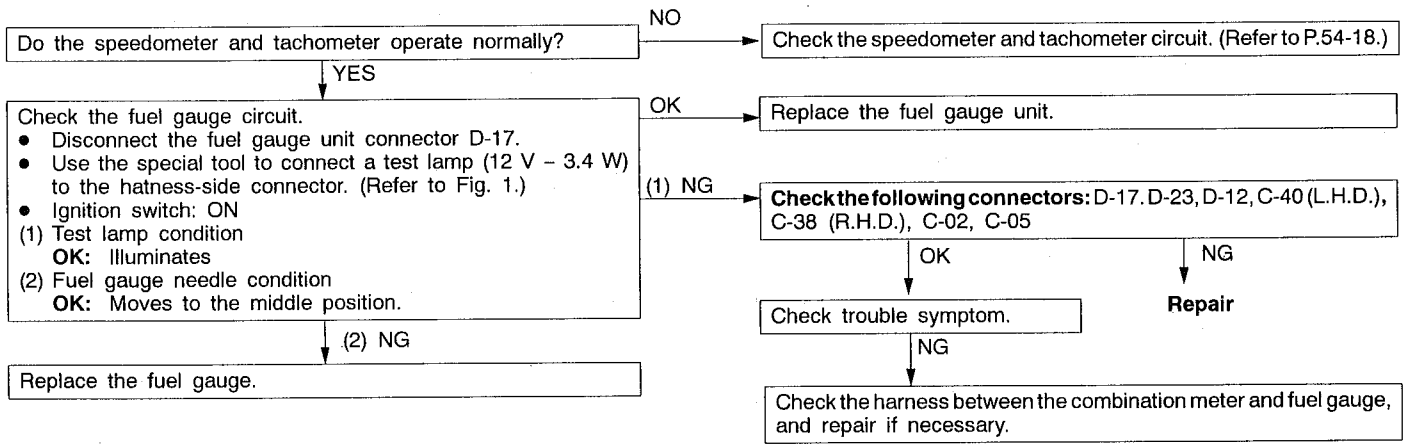

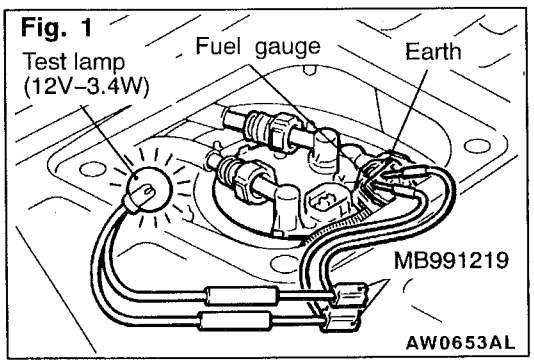

Inspection Procedure 5

Engine coolant temperature gauge does not operate.	Probable cause
If speedometer and tachometer operate normally, the harness from power supply to combination meter is normal.	• Malfunction of engine coolant temperature gauge unit • Malfunction of engine coolant temperature gauge • Malfunction of harness or connector

Do the speedometer and tachometer operate normally?
- NO → Check the speedometer and tachometer circuit. (Refer to P.54-18.)
- YES ↓

Check the engine coolant temperature gauge circuit.
- Disconnect the engine coolant temperature gauge unit connector A-68.
- Use the special tool to connect a test lamp (12 V – 3.4 W) to the hatness-side connector. (Refer to Fig. 2.)
- Ignition switch: ON

(1) Test lamp condition
OK: Illuminates
(2) Engine coolant temperature gauge needle condition
OK: Moves to the middle position.

- OK → Replace the engine coolant temperature gauge unit.
- (1) NG → **Check the following connectors:** A-68, C-29, C-06
  - OK ↓ Check trouble symptom.
    - NG ↓ Check the harness between the combination meter and engine coolant temperature gauge, and repair if necessary.
    - OK → Repair
  - NG → Repair
- (2) NG ↓ Replace the engine coolant temperature gauge.

Fig. 2 <4G1>

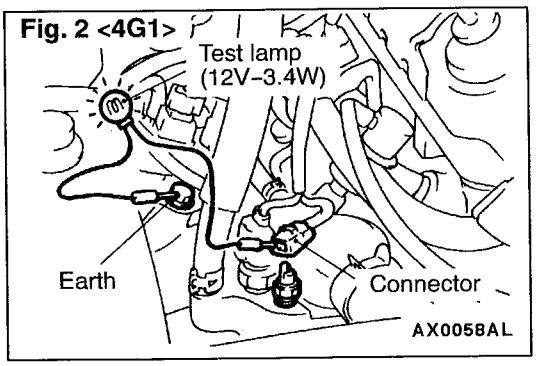

Fig. 2 <4G9>

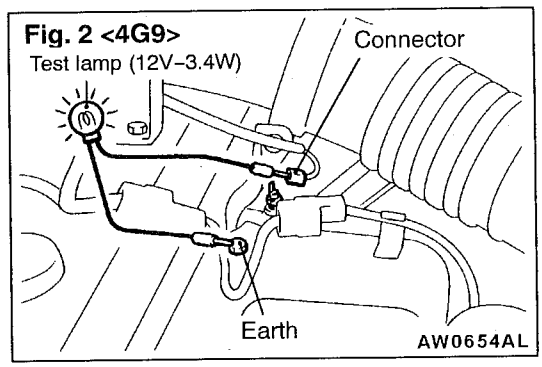

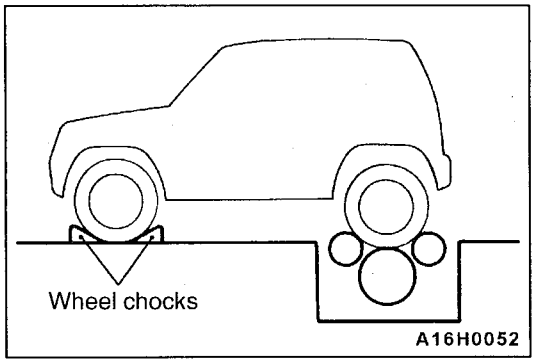

ON-VEHICLE SERVICE

SPEEDOMETER CHECK

1. Adjust the pressure of the tyres to the specified level. (Refer to GROUP 31 – Service Specifications.)
2. Set the vehicle onto a speedometer tester.
3. Use wheel chocks to hold the front wheels, and apply the parking brake firmly.

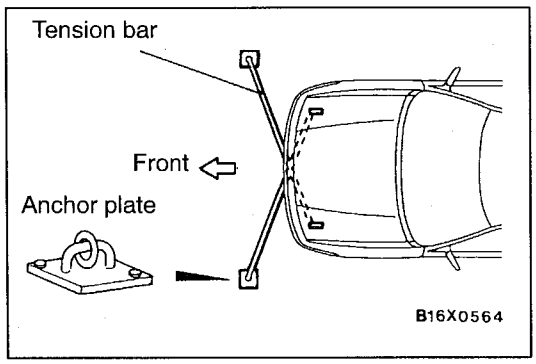

4. To prevent the front wheels from moving from side to side, attach tension bars to the tie-down hooks, and secure both ends to anchor plates.
5. To prevent the vehicle from launching, attach a chain or wire to the rear retraction hook, and make sure the end of the chain or wire is secured firmly.
6. Check if the speedometer indicator range is within the standard values.

Caution
Do not operate the clutch suddenly. Do not increase/decrease speed rapidly while testing.

Standard values:

Standard indication km/h (mph)	Allowable range km/h (mph)
40 (20)	40 – 48 (20 – 25)
80 (40)	80 – 92 (40 – 47)
120 (60)	120 – 136 (60 – 69)
160 (80)	160 – 180 (80 – 91)
– (100)	– (100 – 114)

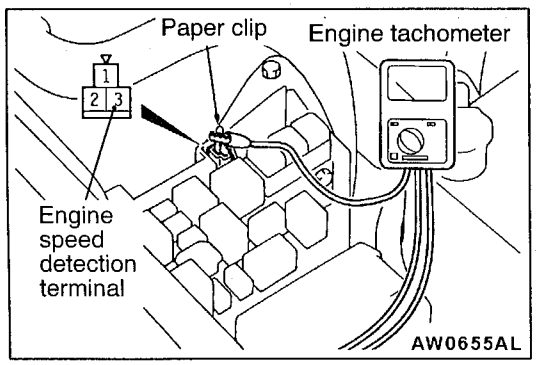

TACHOMETER CHECK

1. Insert a paper clip in the engine speed detection connector from the harness side, and attach the engine speedometer.

   NOTE
   For tachometer check, use of a fluxmeter-type engine speedometer is recommended. (Because a fluxmeter only needs to be clipped to the high tension cable.)

2. Compare the readings of the engine speedometer and the tachometer at every engine speed, and check if the variations are within the standard values.

   Standard values:
   700 r/min: ±100 r/min
   3,000 r/min: ±150 r/min
   5,000 r/min: ±250 r/min
   6,000 r/min: ±300 r/min

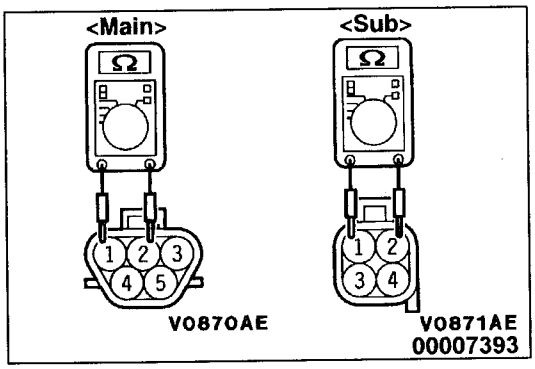

FUEL GAUGE UNIT CHECK

Remove the fuel gauge unit from the fuel tank. (Refer to GROUP 13C.)

FUEL GAUGE UNIT RESISTANCE

1. Check that resistance value between the fuel gauge terminal and earth terminal is at standard value when fuel gauge unit float is at point F (highest) and point E (lowest).

Standard value:

Items		Standard value Ω
Main	Float point F	1 –3
	Float point E	49.7 – 51.7
Sub	Float point F	1 – 3
	Float point E	55.3 – 57.3

2. Check that resistance value changes smoothly when float moves slowly between point F (highest) and point E (lowest).

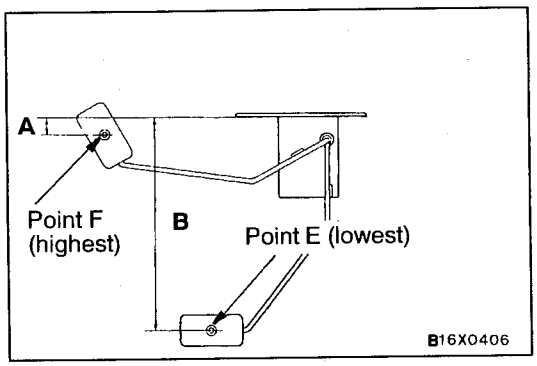

FUEL GAUGE UNIT FLOAT HEIGHT

1. Move float and measure the height A at point F (highest) and B at point E (lowest) with float arm touching stopper.

Standard value:

Items		Standard value mm
Main	Float point F	44.5– 52.5
	Float point E	220.3– 228.3
Sub	Float point F	30.4–36.4
	Float point E	238.5–244.5

2. Check that resistance value changes smoothly when float moves slowly between point F (highest) and point E (lowest).

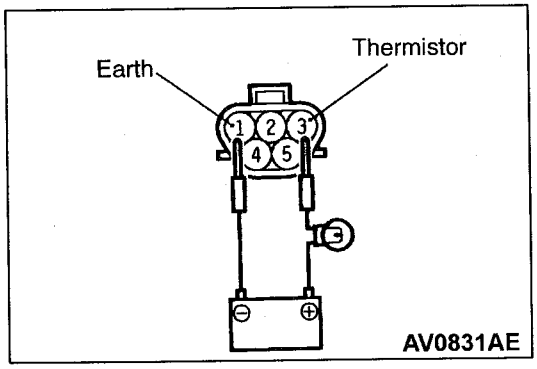

FUEL LEVEL SENSOR (THERMISTOR)

1. Connect the battery to the main fuel gauge unit connector via test lamp (12 V – 3.4 W) as shown in the illustration.

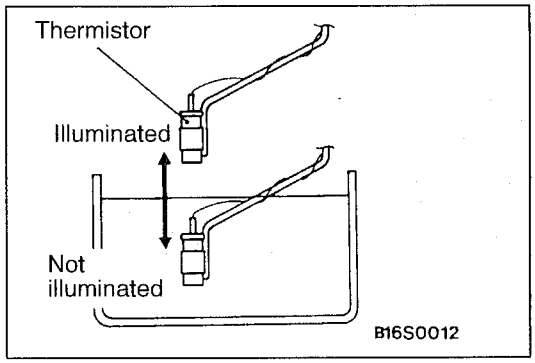

2. Condition is good if the test lamp goes off when the thermistor is immersed in water and comes on when it is taken out of water.

Caution
After finishing this test, wipe the unit dry and install it in the fuel tank.

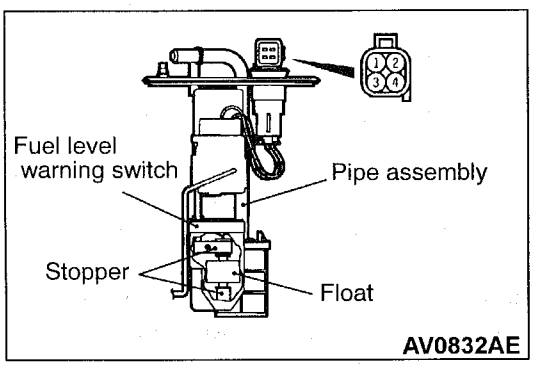

FUEL LEVEL WARNING SWITCH CHECK

1. Remove the sub fuel gauge unit pipe assembly. (Refer to GROUP 13D – Fuel Tank.)

NOTE
Moving up and down of the float makes the reed switch of fuel level warning switch turned on and off.

2. Check the continuity between the terminals.

Float position	Terminal No.	
	3	4
When float is in contact with upper stopper		
When float is in contact with lower stopper	○	○

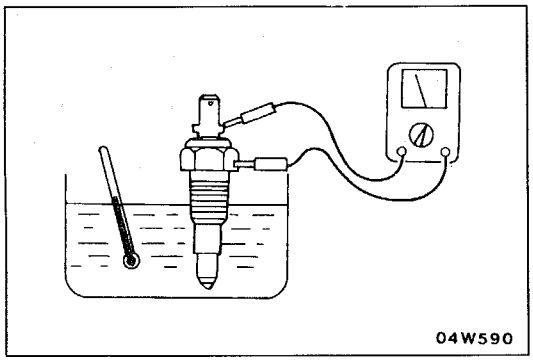

ENGINE COOLANT TEMPERATURE GAUGE UNIT CHECK

1. Bleed the engine coolant. (Refer to GROUP 14 – On-vehicle Service.)
2. Remove the engine coolant temperature gauge unit.
3. Immerse the unit in 70°C water to measure the resistance.

Standard value: 104 ± 13.5 Ω

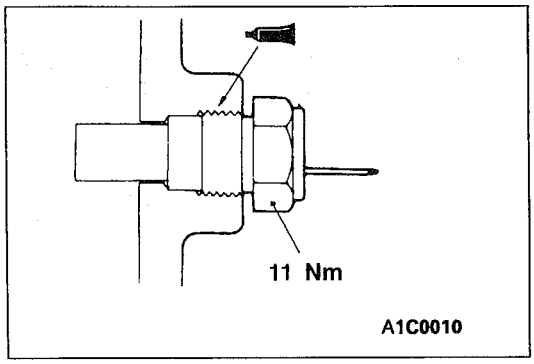

4. After checking, apply the specified adhesive around the thread of engine coolant temperature gauge unit.

Specified sealant:
3M Adhesive Nut Locking No. 4171 or equivalent

5. Add engine coolant. (Refer to GROUP 14 – On-vehicle Service.)

COMBINATION METERS

REMOVAL AND INSTALLATION

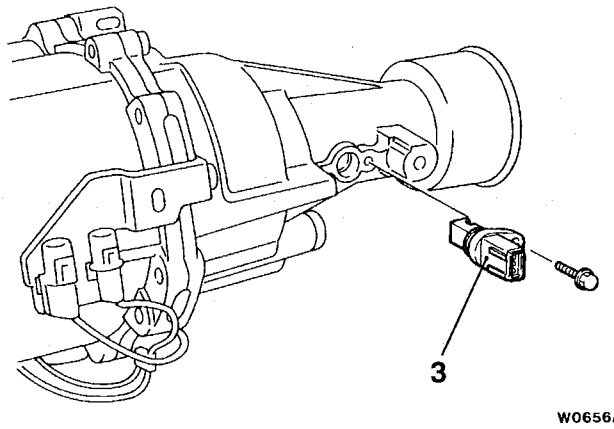

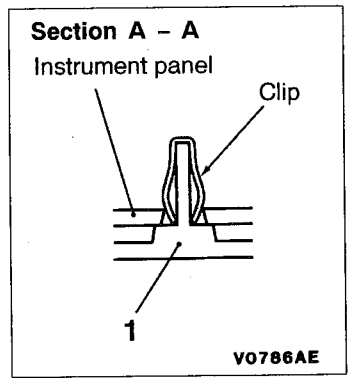

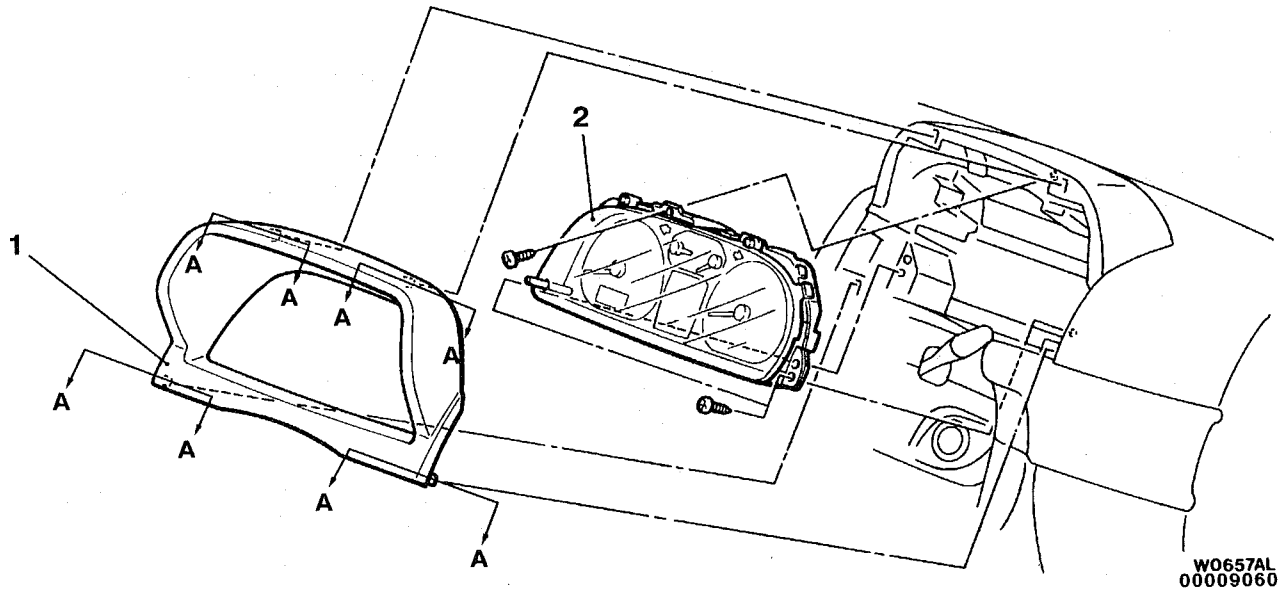

Combination meter removal steps

1. Meter hood
2. Combination meter

Speed sensor removal steps

3. Speed sensor

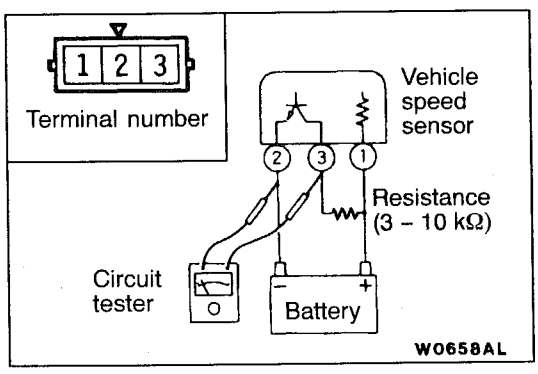

INSPECTION

VEHICLE SPEED SENSOR INSPECTION

1. Lift up the vehicle.
2. Remove the vehicle speed sensor, and then connect the vehicle speed sensor and a resistance (3 – 10 kΩ) as shown in the illustration.
3. Use a circuit tester to check that the voltage between terminal 2 and terminal 3 changes when turning a shaft of the vehicle speed sensor (4 pulses per each one turn).

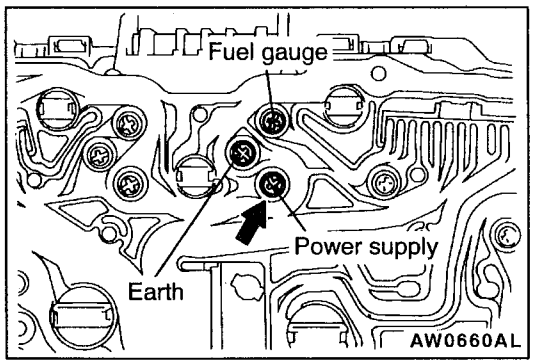

FUEL GAUGE RESISTANCE CHECK

1. Remove the power supply tightening screw.
2. Use an ohmmeter to measure the resistance value between the terminals.

Standard value:
Power supply – Earth: 233.3 Ω
Power supply – Fuel gauge: 108.3 Ω
Fuel gauge – Ground: 125.0 Ω

Caution
When inserting the testing probe into the power supply terminal, be careful not to touch the printed board.

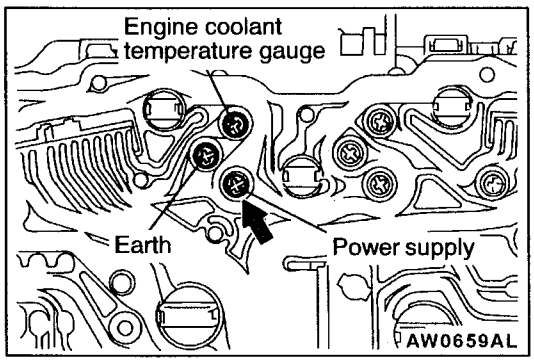

ENGINE COOLANT TEMPERATURE GAUGE RESISTANCE CHECK

1. Remove the power supply tightening screw.
2. Use an ohmmeter to measure the resistance value between the terminals.

Standard value:
Power supply – Earth: 178.9 Ω
Power supply – Engine coolant temperature gauge: 54 Ω
Engine coolant temperature gauge – Earth: 232.9 Ω

Caution
When inserting the testing probe into the power supply terminal, be careful not to touch the printed board.

HEADLAMP, FRONT TURN-SIGNAL LAMP AND FRONT FOG LAMP

SERVICE SPECIFICATIONS

Items		Standard value	Limit
Headlamp aiming for low beam	Vertical direction	60 mm below horizontal (H)	–
	Horizontal direction	Position where the 15° sloping section intersects the vertical line (V)	–
Headlamp intensity cd		–	30,000 or more
Front fog lamp aiming	Vertical direction	100 mm below horizontal (H)	–
	Horizontal direction	Parallel to direction of vehicle travel	–

SPECIAL TOOLS

Tool	Number	Name	Use
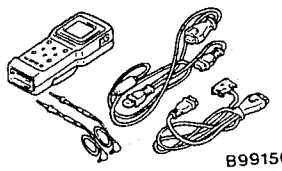 B991502	MB991502	MUT-II sub assembly	ETACS-ECU input check
A 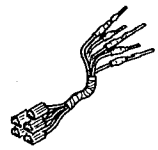 B 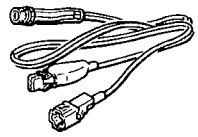 C 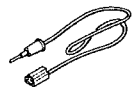 D  C991223	MB991223 A: MB991219 B: MB991220 C: MB991221 D: MB991222	Harness set A: Test harness B: LED harness C: LED harness adapter D: Probe	Making voltage and resistance measurements during troubleshooting A: Connector pin contact pressure inspection B: Power circuit inspection C: Power circuit inspection D: Commercial tester connection
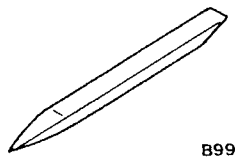 B990784	MB990784	Ornament remover	Removal of switch garnish

TROUBLESHOOTING

The special tool (MB991223) should always be used to measure voltages and resistances when carrying out troubleshooting.

DIAGNOSIS FUNCTION

INPUT SIGNAL INSPECTION PROCEDURE

1. Connect the MUT-II or a voltmeter to the diagnosis connector to check input signal. (Refer to GROUP 00 – How to Use Troubleshooting/Inspection Service Points.)
2. The following input signals can be checked:
   - Lighting switch (HEAD, TAIL, Passing, Dimmer)
   - Turn signal lamp switch (R.H., L.H.)
   - Front fog lamp switch
   - Hazard lamp switch
   - Mist

   NOTE
   If all the input signals cannot be check by using the MUT-II, the diagnosis circuit may be defective.

ETACS FUNCTION ADJUSTMENT PROCEDURE

The following functions can be adjusted by operating input switches. The adjustments will be stored in the ECU memory even after a battery cable is disconnected:

- Automatic headlamp switch-off function

1. Entry conditions to the adjustment mode
   The ETACS-ECU sounds a buzzer once when all of the following conditions are satisfied, and then enters the adjustment mode:
   - Hazard warning lamp switch: OFF
   - Diagnosis control: ON (Connect the MUT-II or earth the diagnosis connector No.1 terminal.)
   - Key reminder switch: OFF
   - Ignition switch: LOCK (OFF) position
   - Driver's door switch: OFF (Close the driver's door.)

   If all of the conditions above are satisfied, the windshield washer switch will be turned on for ten seconds.
2. Exit conditions from the adjustment mode
   The ETACS-ECU cancels the adjustment mode when any of the following conditions is satisfied:
   - Diagnosis control: OFF (Disconnect the MUT-II or earth the diagnosis connector No.1 terminal.)
   - Key reminder switch: ON (Pull out the ignition key.)
   - Ignition switch: Other than LOCK (OFF) position
   - Driver's door switch: ON (Open the driver's door.)
   - After the ETACS-ECU has entered the adjustment mode, no adjustment is made within three minutes (If any adjustment is made within three minutes, the ETACS-ECU monitors a adjustment operation for other three minutes.)
   - Other warning buzzer(s) sounds

3. Adjustment of functions

Function	Adjustment procedure
Automatic headlamp switch-off function	When the lighting switch is at HEAD position, turn signal lamp switch is at RH position and the passing switch is turned on for two seconds, the headlamp automatic switch-off function toggles on and off. • If the function toggles on, the buzzer sounds once (default condition). • If the function toggles off, the buzzer sounds twice.
Initialization of the functions above	When the windshield washer switch remains on for more than twenty seconds, the buzzer sounds twice and then all of the following functions will be initialized. • Automatic headlamp switch-off function • Keyless entry answerback function The buzzer will sound in ten seconds (indicating that the ETACS-ECU enters the adjustment mode), but the washer switch must remains off for twenty seconds in order to initialize all the functions. If the windshield washer switch remains on for more than twenty seconds without entering the adjustment mode, the system enters the adjustment mode in ten seconds, but does not initialize all of the functions.

INSPECTION CHART FOR TROUBLE SYMPTOMS

Trouble symptoms	Inspection procedure	Reference page
The lighting monitor buzzer does not sound under the following conditions while tail lamps or headlamps illuminate. • When the ignition switch is turned to LOCK (OFF) position and the driver's side door is open.	1	54-30
The headlamps and tail lamps do not switch off automatically when removing the ignition key and opening the driver's side door while tail lamps or headlamps illuminate. (However, the lighting monitor buzzer sounds.)	2	54-31
The headlamps do not change to high beam or low beam.	3	54-31
The headlamps do not illuminate when the passing switch is operated.	4	54-32
The fog lamps do not illuminate when the fog lamp switch is turned on while tail lamps or headlamps illuminate.	5	54-32
The fog lamps do not switch off when the lighting switch is turned off while fog lamps illuminate.		
The fog lamps do not switch off when the tail lamps switch off by the automatic headlamp switch-off function while fog lamps illuminate.		
The turn signal lamps do not flash.	6	54-33
The hazard warning lamps do not flash.	7	54-33

INSPECTION PROCEDURE FOR TROUBLE SYMPTOMS

Inspection Procedure 1

The lighting monitor buzzer does not sound when the ignition switch is turned to LOCK (OFF) position and the driver's side door is opened while the tail lamps or headlamps illuminate. When the automatic headlamp switch-off function operates, headlamps switch off after the buzzer sounds for one second, and the buzzer ceases sounding.	**Probable cause**
The cause is probably a malfunction of the lighting switch input circuit system or a malfunction of the ETACS-ECU. If the ignition key reminder warning buzzer is sounding, even if the tail lamps or headlamps illuminate, the lighting monitor buzzer does not sound.	• Malfunction of harness or connector • Malfunction of ETACS-ECU

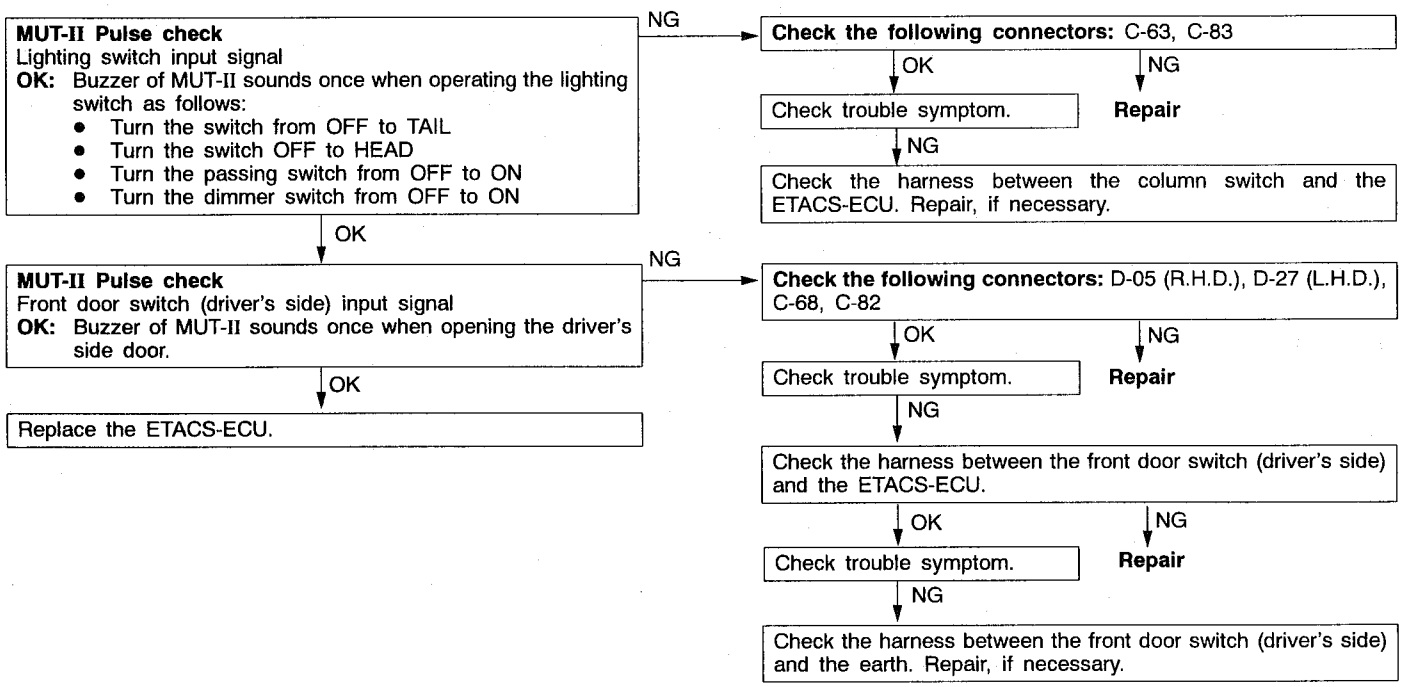

Inspection Procedure 2

The headlamps and tail lamps do not switch off automatically when removing the ignition key and opening the driver's side door while tail lamps or headlamps illuminate. (However, the lighting monitor buzzer sounds.)	Probable cause
The cause is probably a malfunction of the ignition switch and front door switch (R.H.) input circuit system or a malfunction of the ETACS-ECU.	• Malfunction of harness or connector • Malfunction of ETACS-ECU

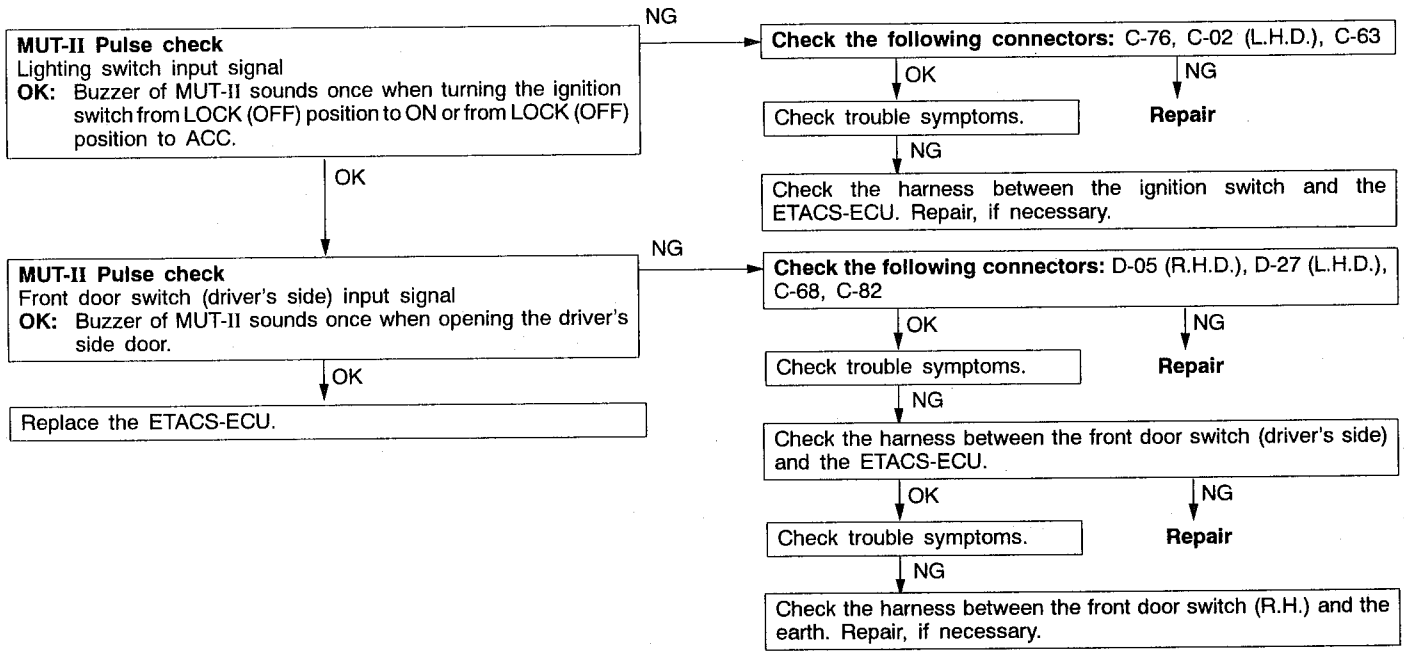

Inspection Procedure 3

The headlamps do not change to high beam or low beam.	Probable cause
The cause is probably a malfunction of the dimmer switch input circuit system or a malfunction of the ETACS-ECU.	• Malfunction of harness or connector • Malfunction of ETACS-ECU • Malfunction of front ECU

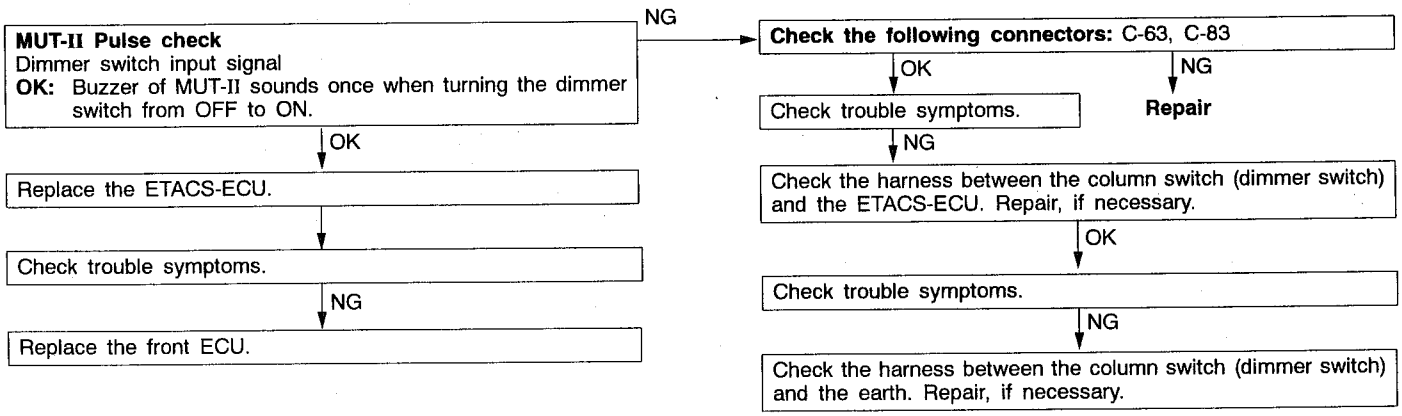

Inspection Procedure 4

The headlamps do not illuminate when the passing switch is operated.	Probable cause
The cause is probably a malfunction of the passing switch input circuit system or a malfunction of the ETACS-ECU.	• Malfunction of harness or connector • Malfunction of ETACS-ECU • Malfunction of front ECU

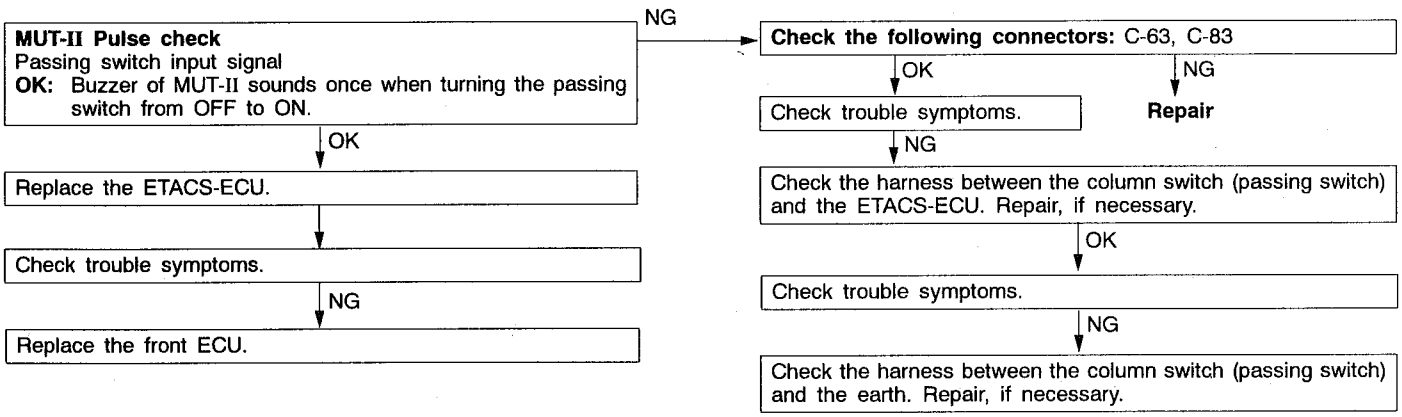

Inspection Procedure 5

The fog lamps do not illuminate when the fog lamp switch is turned on while tail lamps or headlamps illuminate. The fog lamps do not switch off when the lighting switch is turned off while fog lamps illuminate. The fog lamps do not switch off when the tail lamps switch off by the automatic headlamp switch-off function while fog lamps illuminate.	Probable cause
The cause is probably a malfunction of the fog lamp switch input circuit system or a malfunction of the ETACS-ECU.	• Malfunction of harness or connector • Malfunction of ETACS-ECU • Malfunction of front-ECU • Malfunction of fog lamp relay

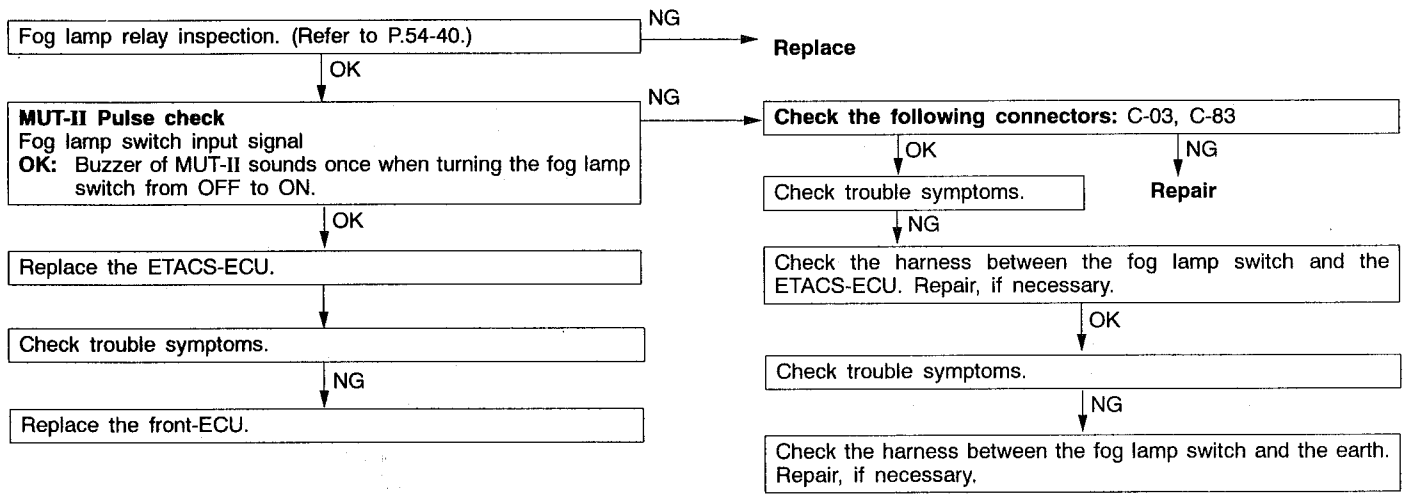

Inspection Procedure 6

The turn signal lamps do not flash.	Probable cause
The cause is probably a malfunction of the turn signal lamp switch input circuit system or a malfunction of the ETACS-ECU.	• Malfunction of harness or connector • Malfunction of ETACS-ECU

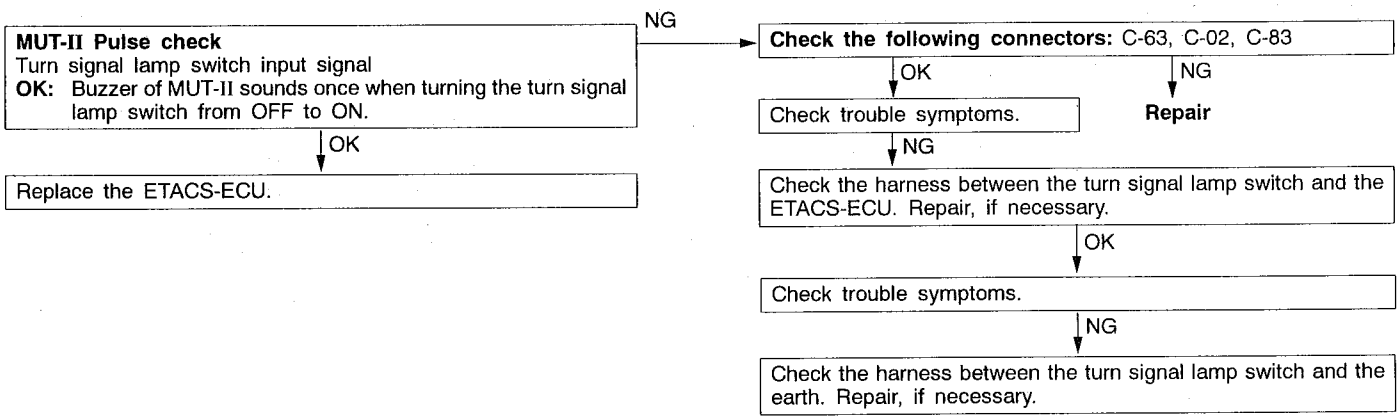

Inspection Procedure 7

The hazard warning lamps do not flash.	Probable cause
The cause is probably a malfunction of the hazard warning lamp switch input circuit system or a malfunction of the ETACS-ECU.	• Malfunction of harness or connector • Malfunction of ETACS-ECU

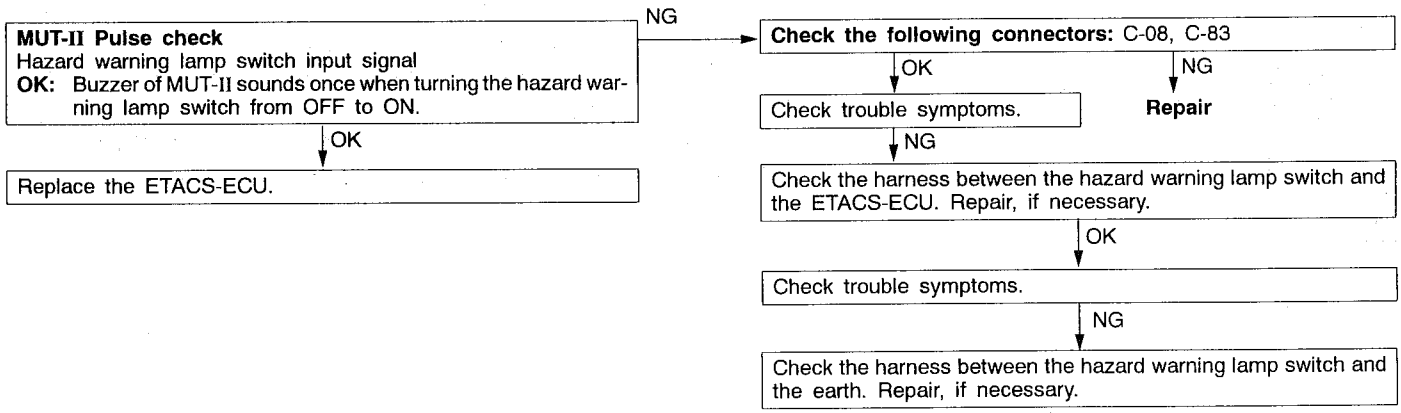

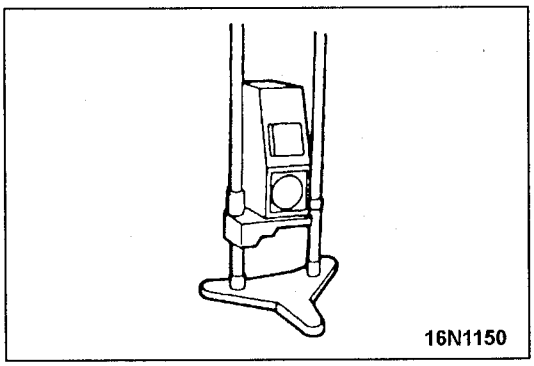
16N1150

ON-VEHICLE SERVICE

HEADLAMP AIMING

<USING A BEAM SETTING EQUIPMENT>

1. The headlamps should be aimed with the proper beam setting equipment, and in accordance with the equipment manufacture's instructions.

   NOTE
   If there are any regulations pertinent to the aiming of headlamps in the area where the vehicle is to be used, adjust so as to meet those requirements.

2. Alternately turn the adjusting screw to adjust the headlamp aiming. (Refer to P.54-35.)

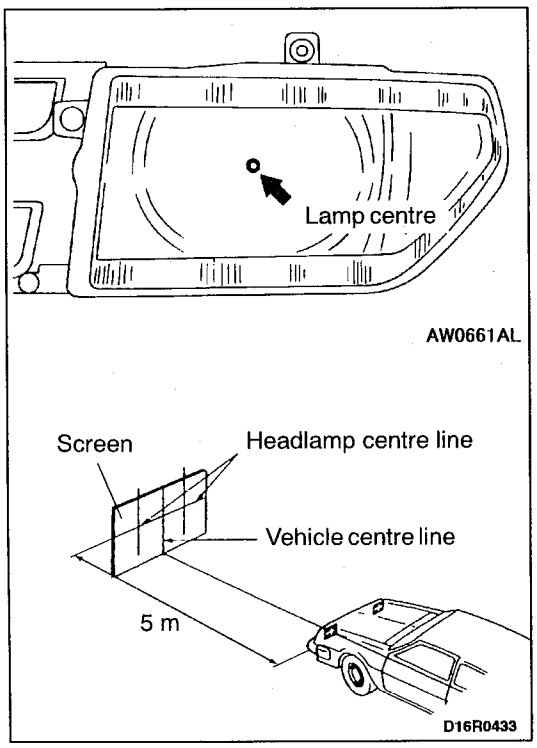

<USING A SCREEN>

1. Inflate the tyres to the specified pressures and there should be no other load in the vehicles other than driver or substituted weight of approximately 75 kg placed in driver's position.
2. Set the distance between the screen and the centre marks of the headlamps as shown in the illustration.

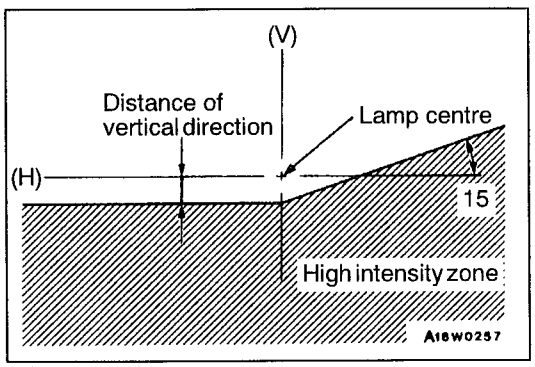

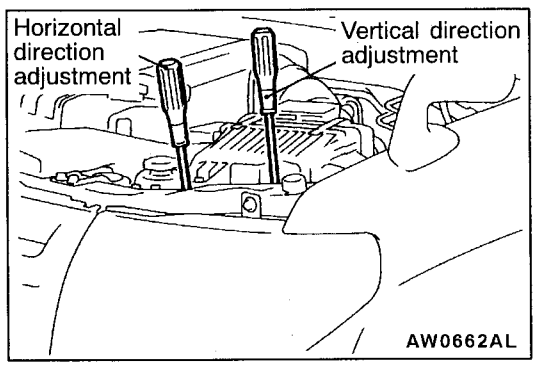

3. Check if the beam shining onto the screen is at the standard value.

   Standard value:
   (Vertical direction)
   60 mm below horizontal (H)
   (Horizontal direction)
   Position where the 15° sloping section intersects the vertical line (V)

   NOTE
   The illustration shows L.H. drive vehicles. For R.H. drive vehicles, it is symmetrical.

4. Alternately turn the adjusting screw to adjust the headlamp aiming.

   Caution
   Be sure to adjust the aiming adjustment screw in the tightening direction.

HEADLAMP INTENSITY MEASUREMENT

Using a photometer, and following its manufacture's instruction manual, measure the headlamp intensity and check to be sure that the limit value is satisfied.

Limit: 30,000 cd or more

NOTE
1. When measuring the intensity, maintain an engine speed of 2,000 r/min, with the battery in the charging condition.
2. There may be special local regulations pertaining to headlamp intensity, be sure to make any adjustments necessary to satisfy such regulations.
3. If an illuminometer is used to make the measurements, convert its values to photometer values by using the following formula.

   $I = Er^2$ Where:
   I=intensity (cd)
   E=illumination (lux)
   r=distance (m) from headlamps to illuminometer

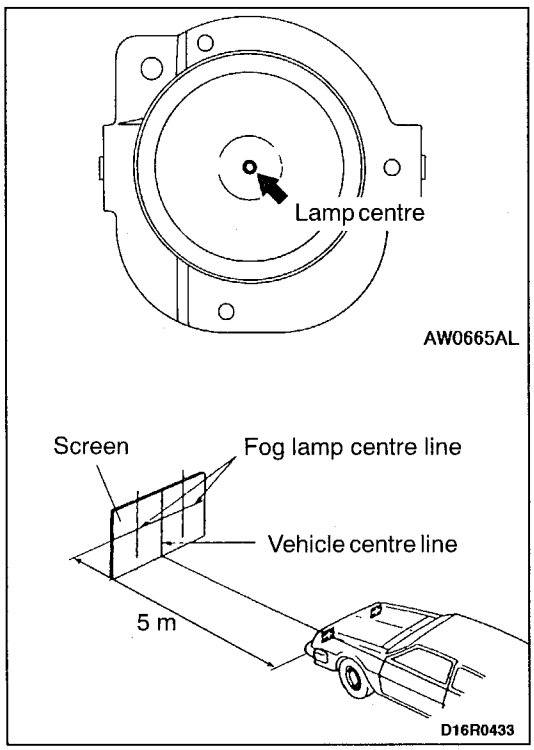

FRONT FOG LAMP AIMING

1. Measure the centre of the fog lamps, as shown in the illustration.
2. Set the distance between the screen and the centre of the fog lamps as shown in the illustration.
3. Inflate the tyres to the specified pressures and there should be no other load in the vehicles other than driver or substituted weight of approximately 75 kg placed in the driver's position.
4. With the engine running at 2,000 r/min, aim the fog lamp.

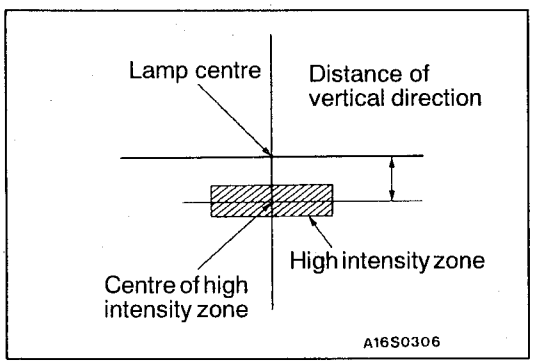

5. Check if the beam shining onto the screen is at the standard value.

Standard value:
(Vertical direction)
100 mm below horizontal (H)
(Horizontal direction)
Parallel to direction of vehicle travel

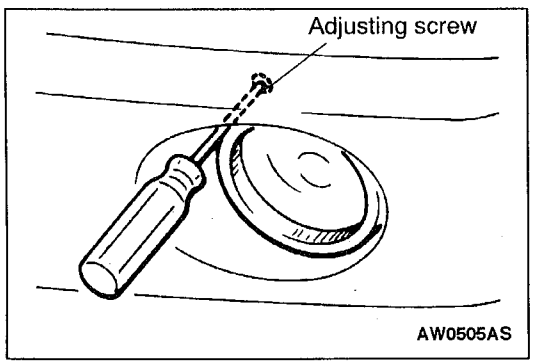

NOTE
The horizontal direction is non-adjustable. If the deviation of the light beam axis exceeds the standard value, check to be sure that the mounting location or some other point is not defective.

Caution
When making the aiming adjustment, be sure to mask those lamps which are not being adjusted.

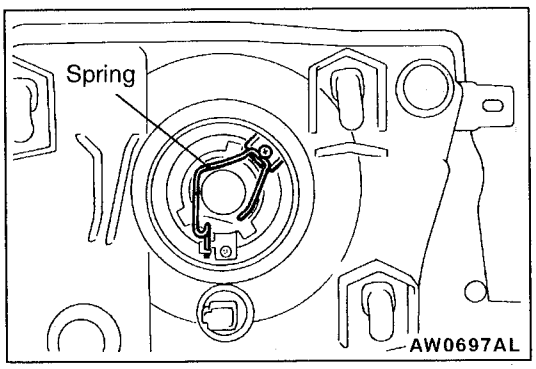

BULB REPLACEMENT

<Headlamp Bulb>

1. Disconnect the connector.
2. Remove the socket cover.
3. Remove the bulb mounting spring, and then withdraw the bulb.
4. Install new bulb, and then connect the connector securely.

Caution
Do not touch the surface of the bulb with hands or dirty gloves. If the surface does become dirty, clean it with alcohol or thinner, and let it dry thoroughly before installing.

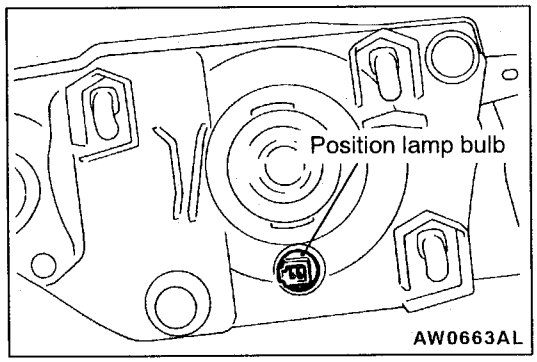

<Position Lamp Bulb>

Remove the lamp socket by turning it anti-clockwise, then pull out the bulb from the socket.

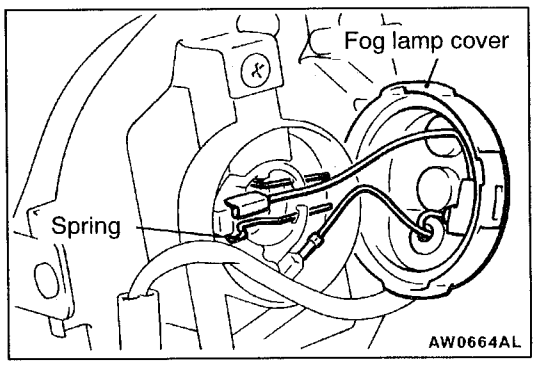

<Fog lamp Bulb>

1. Remove the fog lamp.
2. Remove the fog lamp cover.
3. Remove the bulb mounting spring, and then withdraw the bulb.
4. Disconnect the connector, and then replace the bulb.

Caution
(1) Always use the genuine part for replacement.
(2) Do not touch the surface of the bulb with hands or dirty gloves. If the surface does become dirty, clean it with alcohol or thinner, and let it dry thoroughly before installing.
(3) Be sure to install the socket cap. If the socket cap is improperly installed, the lens will be fogged or water may enter the lamp unit.

HEADLAMP, FRONT TURN-SIGNAL LAMP AND FRONT FOG LAMP

REMOVAL AND INSTALLATION

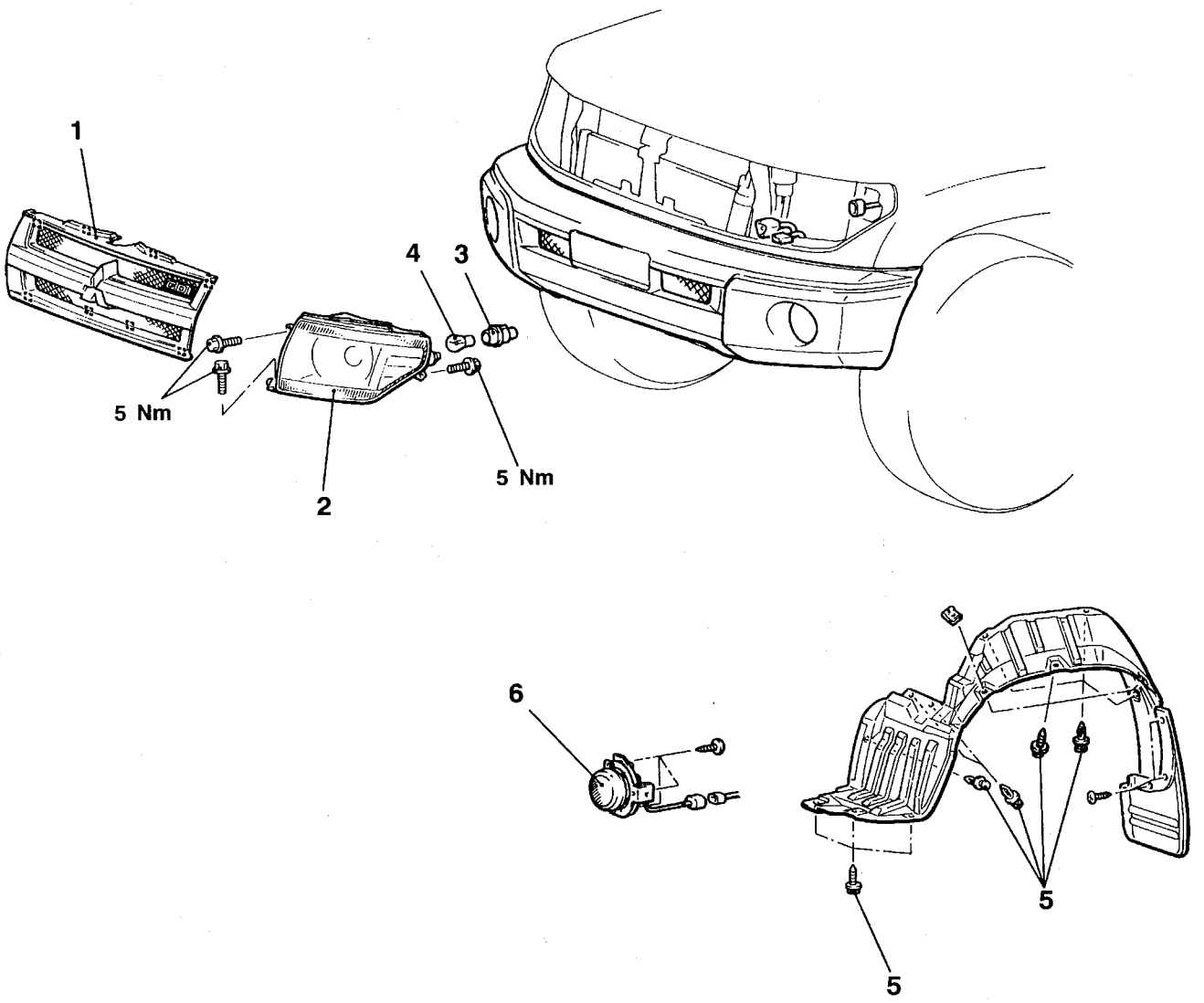

AW0667AL

Headlamp removal steps

◀A▶ 1. Radiator grille
2. Headlamp
3. Front turn-signal lamp socket
4. Front turn-signal lamp bulb

Fog lamp removal steps

5. Splash shield front part mounting clips and screws
6. Fog lamp

NOTE
For removal and installation of the column switch (lighting switch), refer to GROUP 37A – Steering Wheel and Shaft.

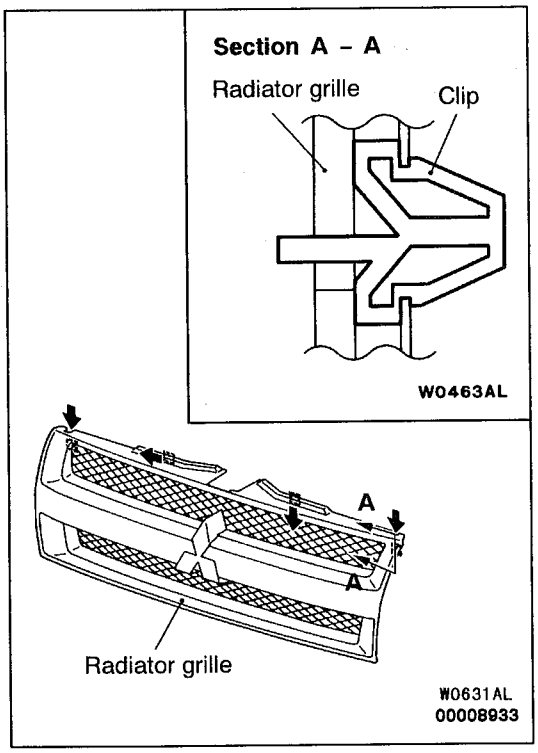

REMOVAL SERVICE POINTS

◀A▶ RADIATOR GRILLE REMOVAL

Pull the radiator grille toward you gently, and press the clip tab with a flat-tipped screwdriver toward the arrow to remove the radiator grille.

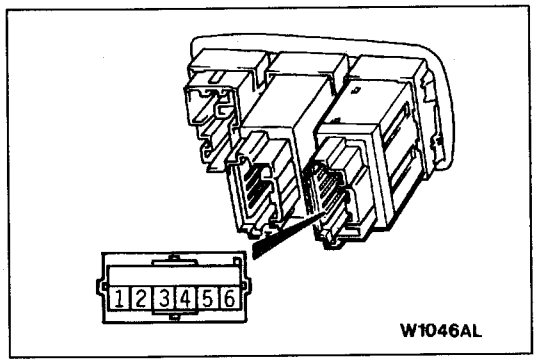

INSPECTION

FOG LAMP SWITCH CONTINUITY CHECK

Switch position	Terminal No.						
	1	2	3	–	4	5	6
ON	○—○		○—ILL—○			○—○	
OFF			○—ILL—○				

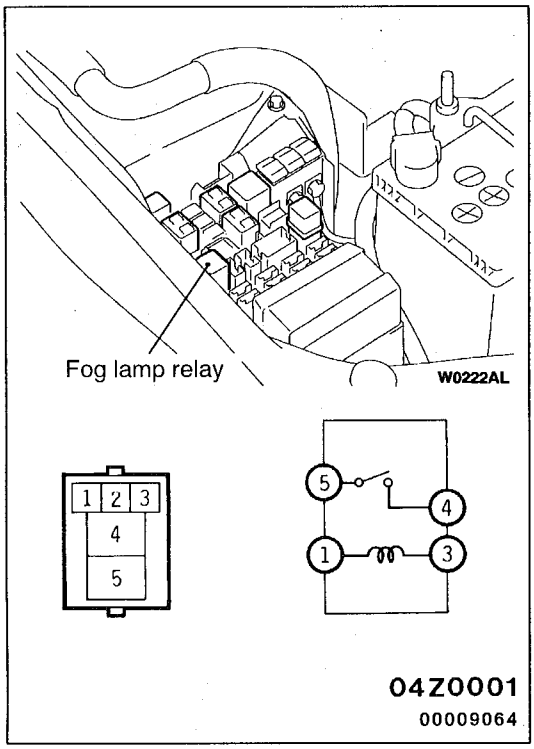

FOG LAMP RELAY CONTINUITY CHECK

Battery voltage	Terminal No.			
	1	3	4	5
Not supplied	○	○		
Supplied	⊕	⊖	○	○

SIDE TURN-SIGNAL LAMP

SPECIAL TOOL

Tool	Number	Name	Use
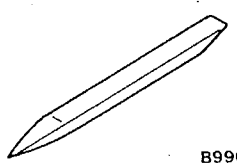 B990784	MB990784	Ornament remover	Removal of side turn-signal lamp

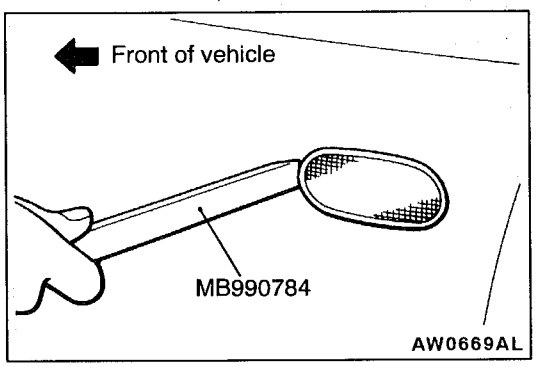

REMOVAL SERVICE POINT

SIDE TURN-SIGNAL LAMP REMOVAL

Use a special tool to remove the lock from the fender panel, and then remove the side turn-signal lamp.

ROOM LAMP

SPECIAL TOOLS

Tool	Number	Name	Use
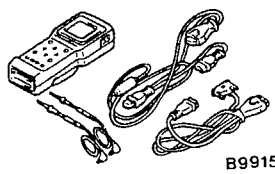 B991502	MB991502	MUT-II sub assembly	ETACS-ECU input check
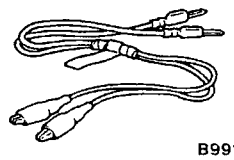 B991529	MB991529	Diagnosis code check harness	ETACS-ECU input check
A 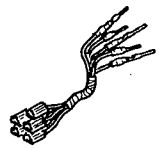 B 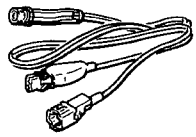 C 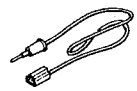 D  C991223	MB991223 A: MB991219 B: MB991220 C: MB991221 D: MB991222	Harness set A: Test harness B: LED harness C: LED harness adapter D: Probe	ETACS-ECU terminal voltage measurement A: Connector pin contact pressure inspection B: Power circuit inspection C: Power circuit inspection D: Commercial tester connection

TROUBLESHOOTING

DIAGNOSIS FUNCTION

INPUT SIGNAL INSPECTION PROCEDURE

1. Connect the MUT-II or a voltmeter to the diagnosis connector to check input signal. (Refer to GROUP 00 – How to Use Troubleshooting/Inspection Service Points.)
2. The following input signals can be checked:
   - Door switch
   - Ignition switch
   - Key reminder switch
   - Keyless entry transmitter (LOCK, UNLOCK)

   NOTE
   If all the input signals cannot be check by using the MUT-II, the diagnosis circuit may be defective.

INSPECTION CHART FOR TROUBLE SYMPTOMS

Trouble symptoms	Inspection procedure	Reference page
When all the doors is closed, the room lamp is switched off immediately, but does not fade out.	1	54-43
When a door is opened with the room lamp switch in the DOOR position, the room lamp does not illuminate.	2	54-44
When the ignition switch is turned to the ON position while the room lamp is fading out, the room lamp is not switched off (However, the room lamp will be switched off after fading out).	3	54-44
The room lamp can not be switched off (However, it is switched off when the room lamp switch is set to the OFF position).	4	54-45

INSPECTION PROCEDURE 1

When all the doors is closed, the room lamp is switched off immediately, but does not fade out.	**Probable cause**
The harness wire in the earth circuit or the ETACS-ECU can be defective.	• Malfunction of harness or connector • Malfunction of ETACS-ECU

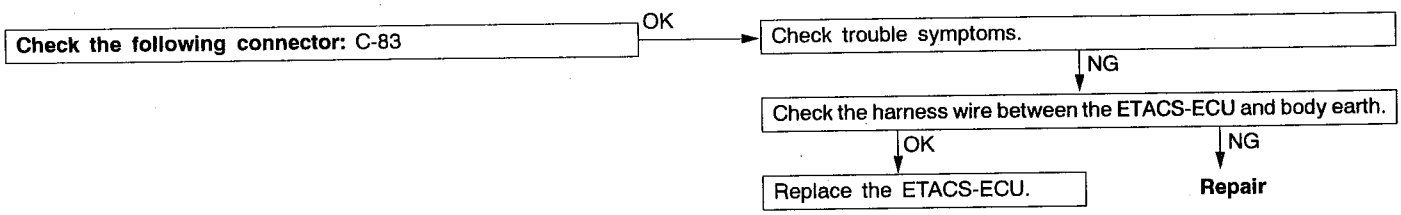

INSPECTION PROCEDURE 2

When a door is opened with the room lamp switch in the DOOR position, the room lamp does not illuminate.	Probable cause
The door switch circuit of all doors or the room lamp illumination circuit can be defective.	• Malfunction of room lamp • Malfunction of harness or connector • Malfunction of ETACS-ECU

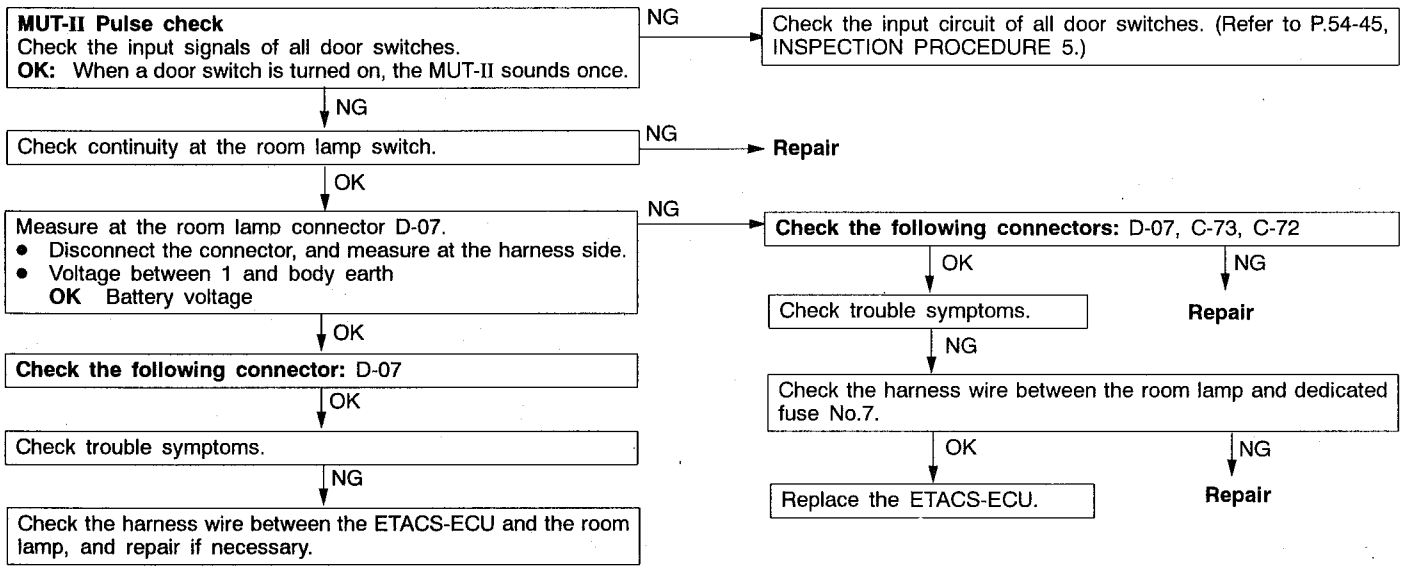

INSPECTION PROCEDURE 3

When the ignition switch is turned to the ON position while the room lamp is fading out, the room lamp is not switched off (However, the room lamp will be switched off after fading out).	Probable cause
The ignition circuit or the ETACS-ECU can be defective. In addition, a defective fuse can cause a malfunction in the indicator lamp in the combination meter or a short in the harness wire.,	• Malfunction of fuse • Malfunction of connector • Malfunction of harness • Malfunction of ETACS-ECU

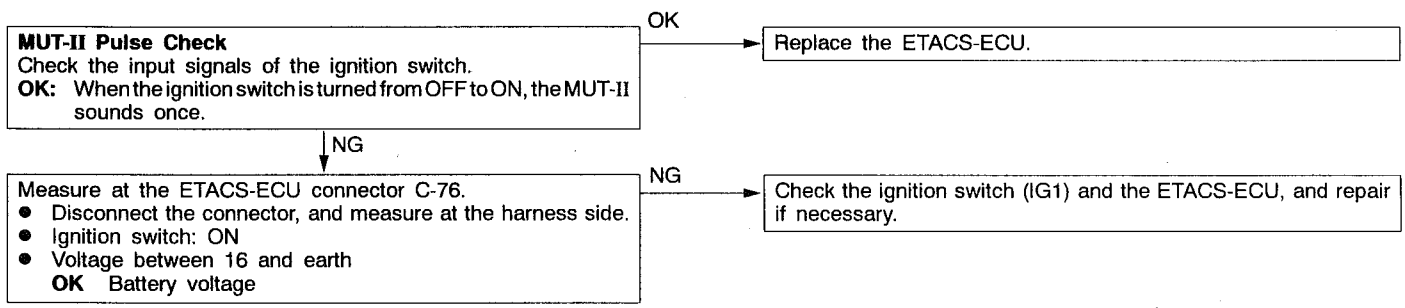

INSPECTION PROCEDURE 4

The room lamp can not be switched off (However, it is switched off when the room lamp switch is set to the OFF position.	Probable cause
A short in the harness wire can be present, or a door switch or back door switch can be defective.	• Malfunction of door switch or back door switch • Malfunction of harness

Measure at J/B connector C-68.
- Disconnect the connector, and measure at the harness side.
- Ignition switch: ON
- Door switch: ON (door open)
- Continuity between 10 and earth

OK Continuity

OK → When the connector of a door switch or back door switch are disconnected, does the room lamp illuminate?

NO → Check the harness wire between the J/B and the door switch or back door switch, and repair if necessary.

YES → **Replace the door switch.**

NG → Check the harness wire between the J/B and the room lamp, and repair if necessary.

INSPECTION PROCEDURE 5

Check the input circuit of all door switches.

MUT-II Pulse Check
Check the input signals of all door switches.
OK: When a closed door is opened, the MUT-II sounds once.

NG → **Check the following connectors:**
D-05, D-27, F-07, D-15, C-68, C-82

OK → Check trouble symptoms.

NG → **Repair**

NG → Check the ETACS-ECU and each door harness wire.

OK → Check trouble symptoms.

NG → **Repair**

NG → Replace the ETACS-ECU.

REAR COMBINATION LAMP

SPECIAL TOOLS

Tool	Number	Name	Use
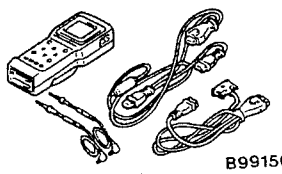 B991502	MB991502	MUT-II sub assembly	ETACS-ECU input check
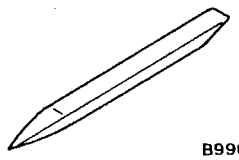 B990784	MB990784	Ornament remover	Removal of switch garnish

TROUBLESHOOTING

Refer to P.54-28.

REAR COMBINATION LAMP

REMOVAL AND INSTALLATION

Pre-removal and Post-installation Operation
Quarter Trim Removal and Installation (Refer to GROUP 52A.)

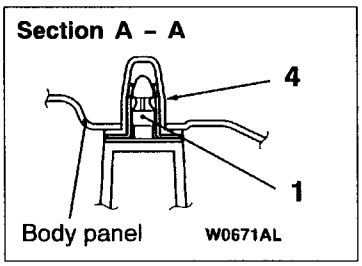

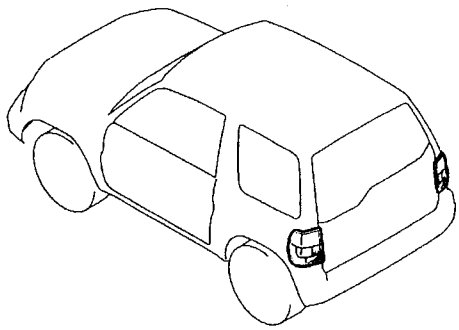

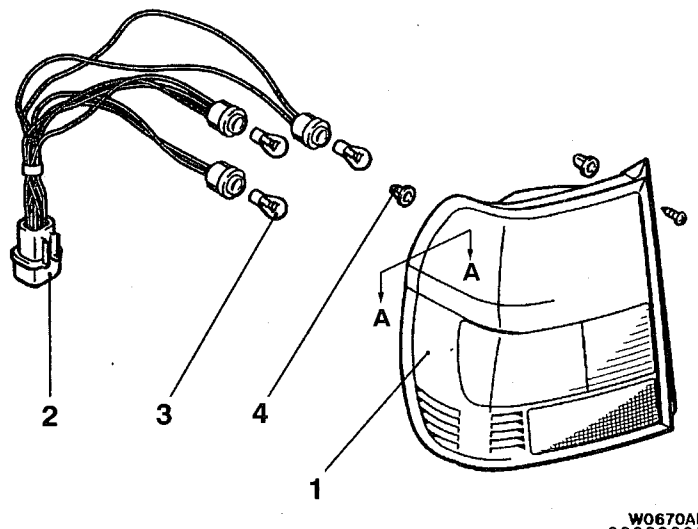

W0670AL
00009065

Removal steps
1. Rear combination lamp
2. Socket assembly
3. Bulb
4. Grommet

NOTE
For removal and installation of the column switch (lighting switch), refer to GROUP 37A – Steering Wheel and Shaft.

HIGH-MOUNTED STOP LAMP AND LICENCE PLATE LAMP

REMOVAL AND INSTALLATION

<Vehicles without smoked windows>

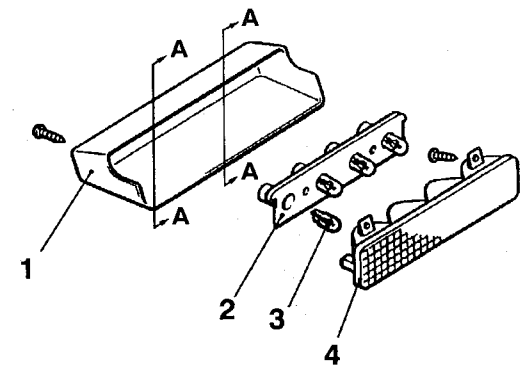

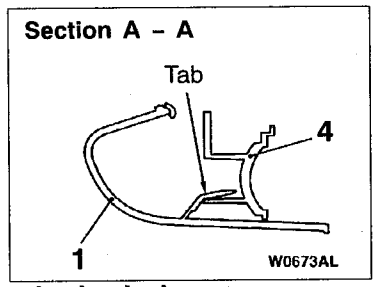

<Vehicles with smoked windows>

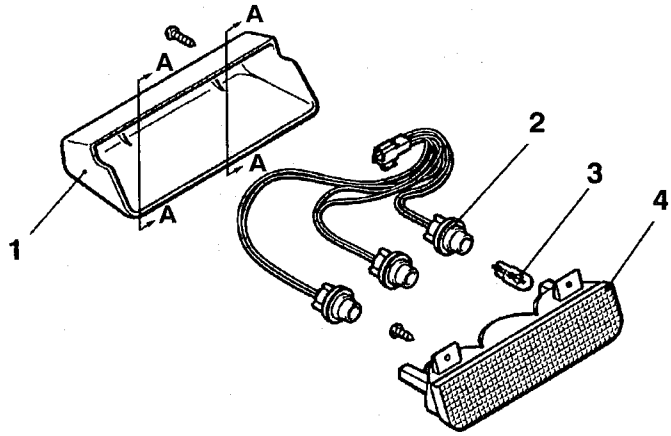

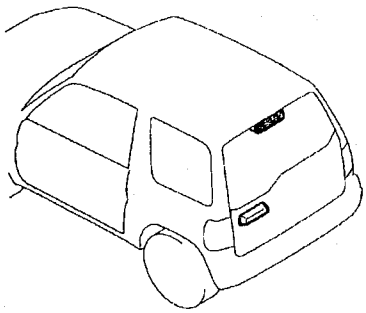

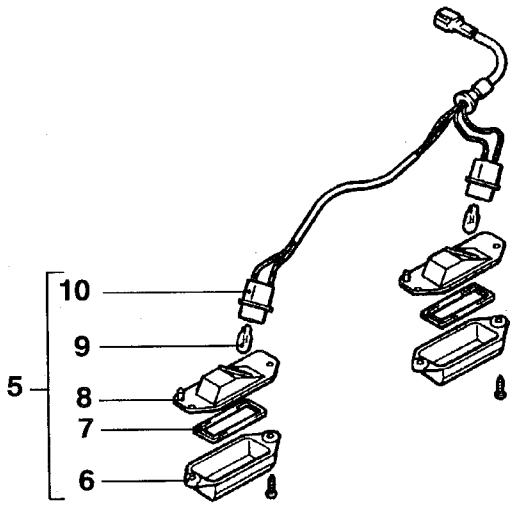

W0672AL

00009066

High-mounted stop lamp removal steps

1. High-mounted stop lamp cover
2. Socket assembly
3. Bulb
4. High-mounted stop lamp

Licence plate lamp removal steps

- Back door trim and waterproof film (Refer to GROUP 42.)
- Licence plate lamp garnish (Refer to GROUP 42.)

5. Licence plate lamp assembly
6. Lens
7. Packing
8. Bulb
9. Licence plate lamp
10. Socket assembly

COLUMN SWITCH

REMOVAL AND INSTALLATION

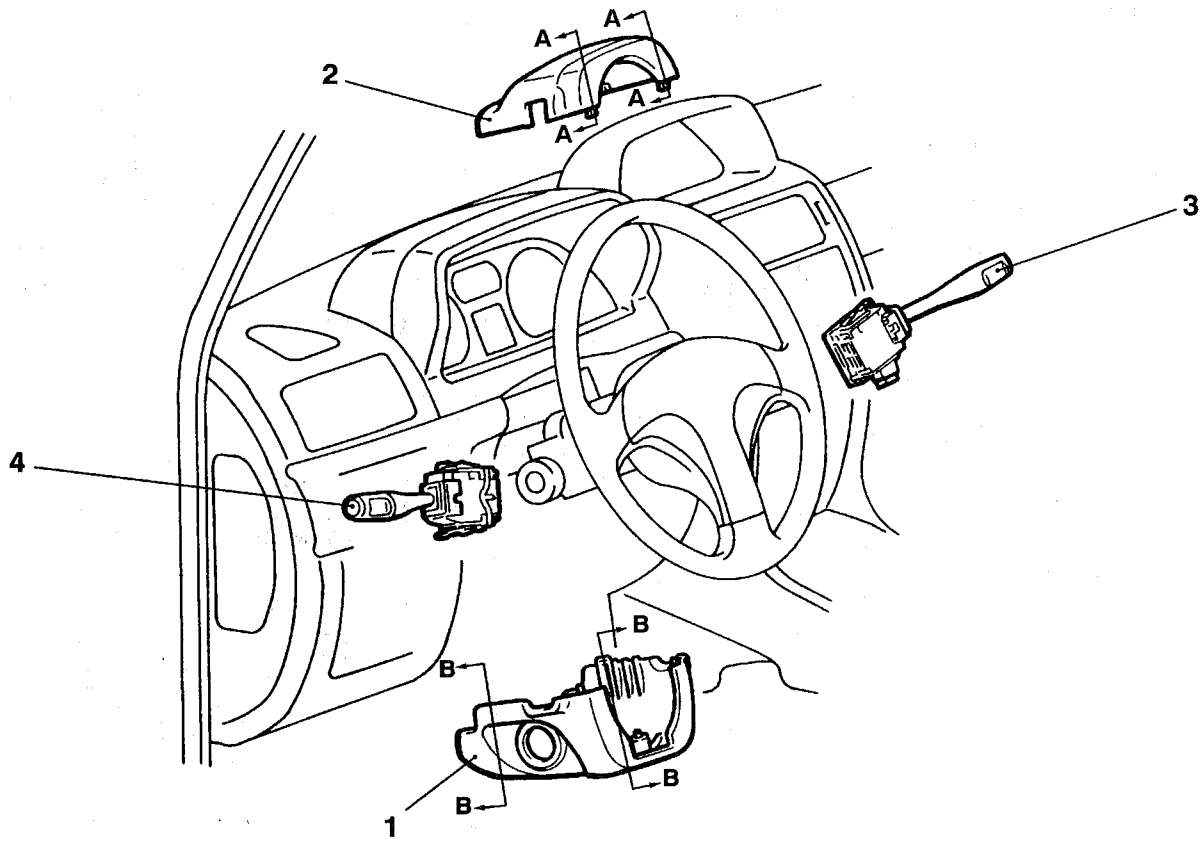

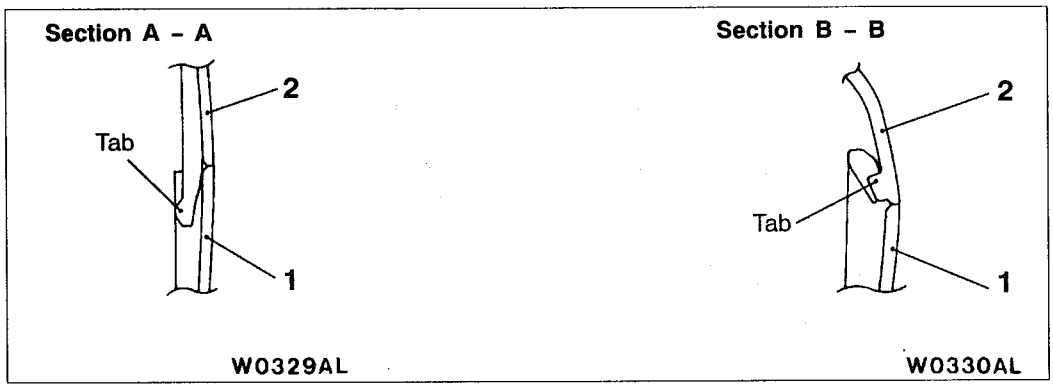

AW1051AL

Removal steps

1. Column cover, lower
2. Column cover, upper
3. Wiper and washer switch
4. Lighting switch

RHEOSTAT <Vehicles for Australia and New Zealand>

SPECIAL TOOL

Tool	Number	Name	Use
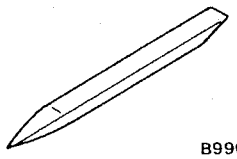 B990784	MB990784	Ornament remover	Removal of switch garnish

RHEOSTAT

REMOVAL AND INSTALLATION

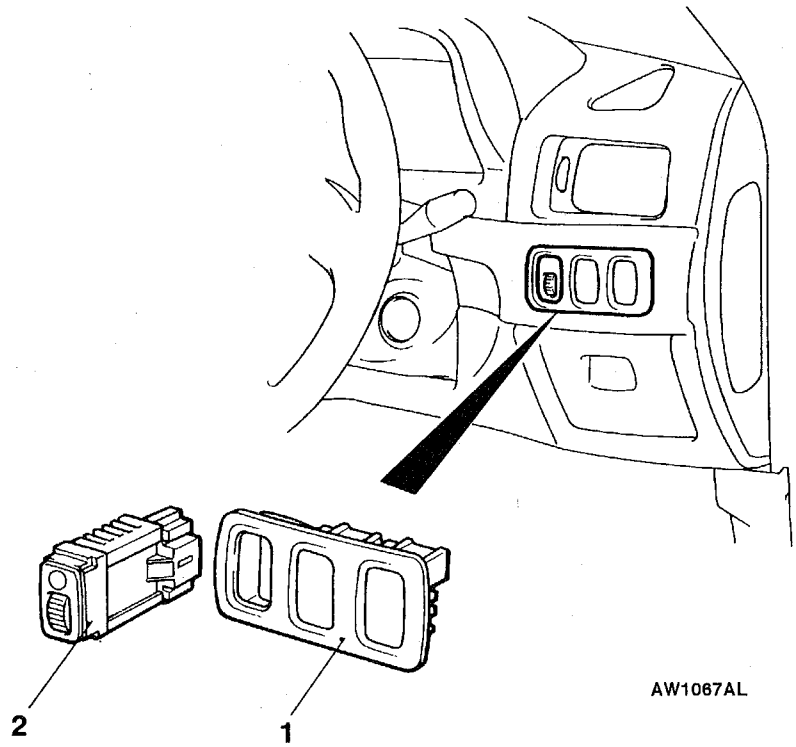

Removal steps

1. Switch panel
2. Rheostat

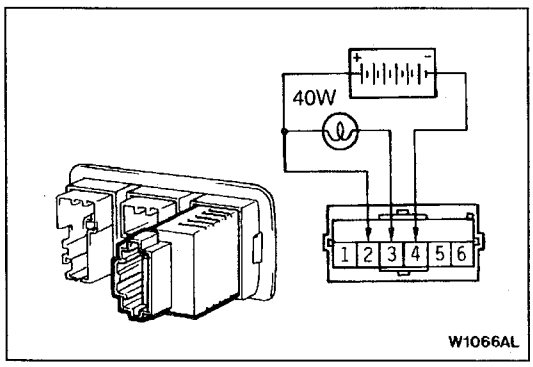

INSPECTION

1. Connect the battery and the test bulb (40W) as shown in the illustration.
2. Operate the rheostat, and if the brightness changes smoothly without switching off, then the rheostat function is normal.

HAZARD WARNING LAMP SWITCH

SPECIAL TOOL

Tool	Number	Name	Use
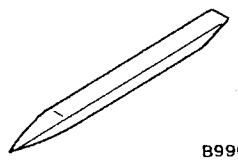 B990784	MB990784	Ornament remover	Removal of center panel

HAZARD WARNING LAMP SWITCH

REMOVAL AND INSTALLATION

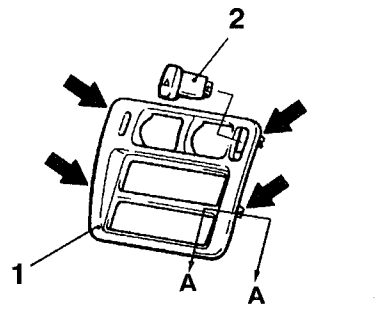

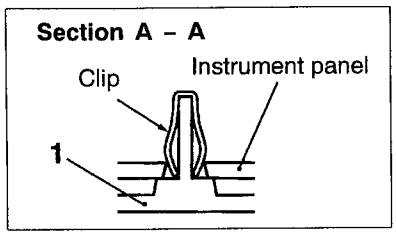

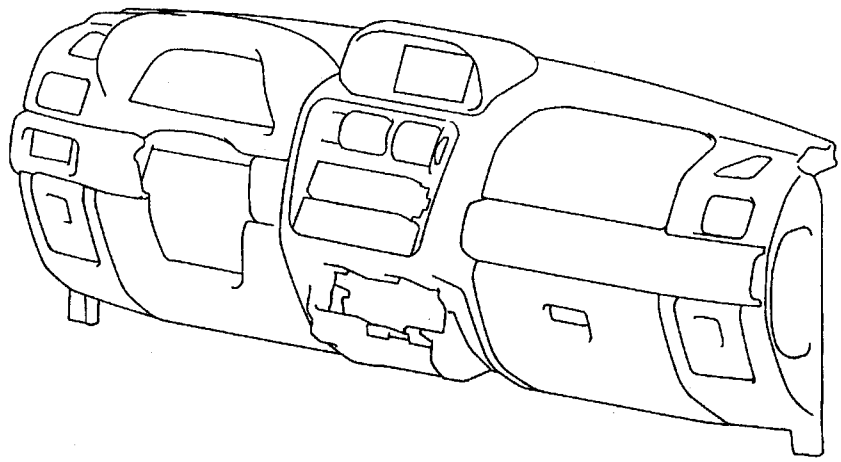

AW1049AL

: shows clips.

Removal steps

1. Center panel
2. Hazard warning lamp switch

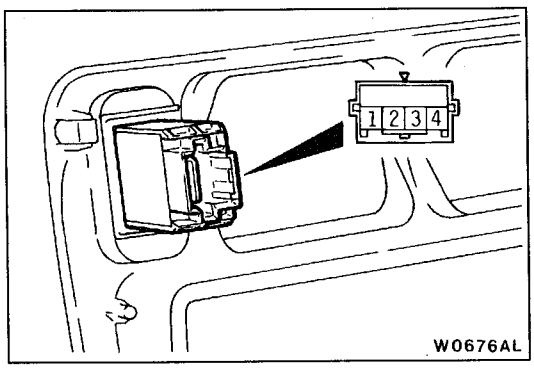

INSPECTION

Switch position	Terminal No.				
	1	2	3		4
OFF			○	ILL	○
ON	○	○	○	ILL	○

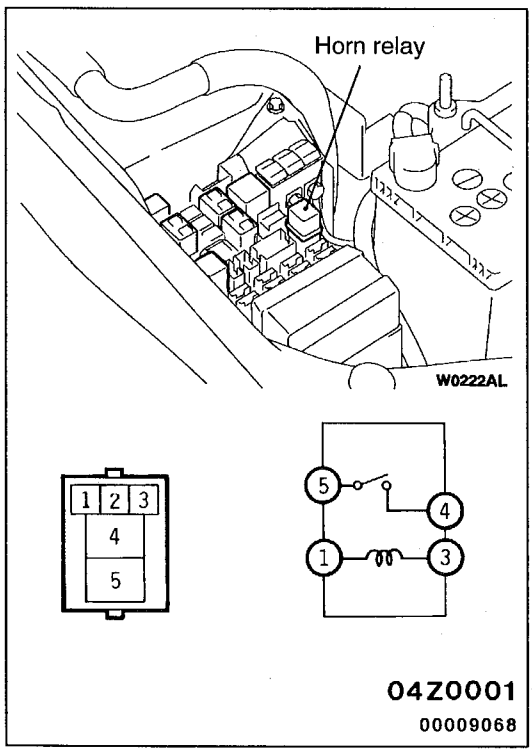

HORN

INSPECTION

HORN RELAY CONTINUITY CHECK

Battery voltage	Terminal No.			
	1	3	4	5
Not supplied	○	○		
Supplied	⊕	⊖	○	○

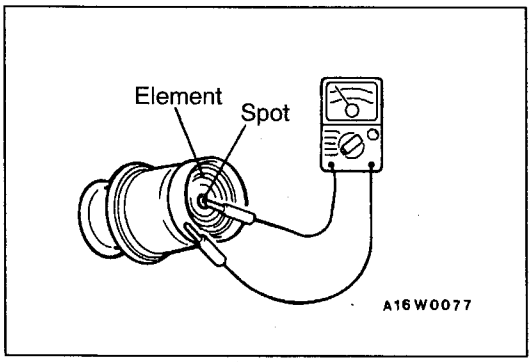

CIGARETTE LIGHTER

INSPECTION

- Take out the plug, and check for a worn edge on the element spot connection, and for shreds of tobacco or other material on the element.
- Using a circuit tester, check the continuity of the element.

CAUTIONS FOR USE OF THE CIGARETTE LIGHTER SOCKET AS AUXILIARY POWER SOURCE

1. When using a "plug-in" type of accessory, do not use anything with a load of more than 120W.
2. It is recommended that only the lighter be inserted in the receptacle.
   Use of "plug-in" type accessories may damage the receptacle and result in poor retention of the lighter.
3. The specified load should be strictly observed, because overloaded cord burns the ignition switch and harness.

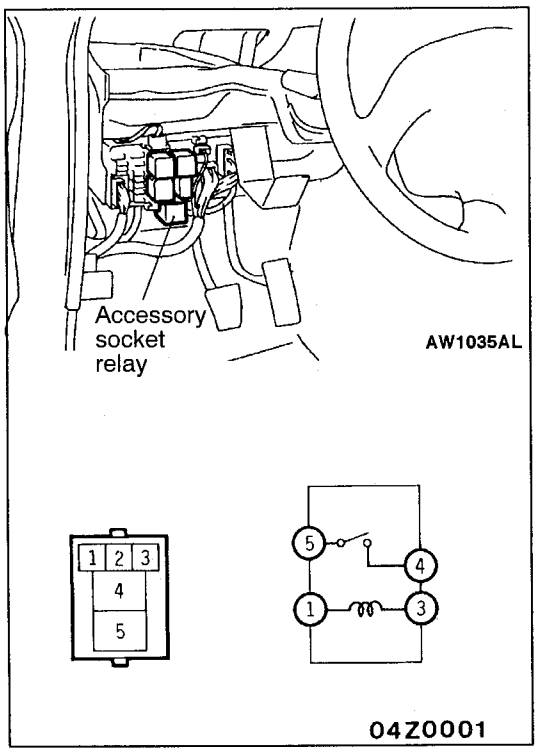

ACCESSORY SOCKET

INSPECTION

ACCESSORY SOCKET RELAY CONTINUITY CHECK

Battery voltage	Terminal No.			
	1	3	4	5
Not supplied	○	○		
Supplied	⊕	⊖	○	○

CLOCK

SPECIAL TOOL

Tool	Number	Name	Use
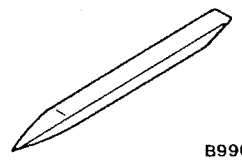 B990784	MB990784	Ornament remover	Removal of center display hood

CLOCK

REMOVAL AND INSTALLATION

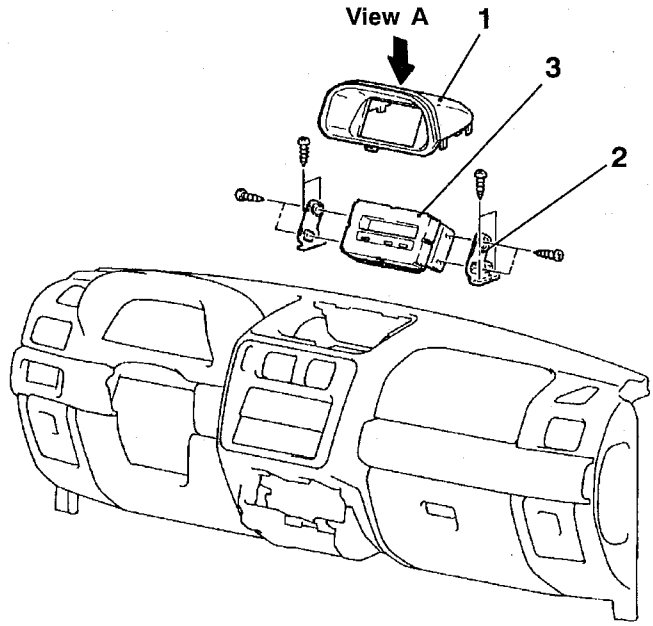

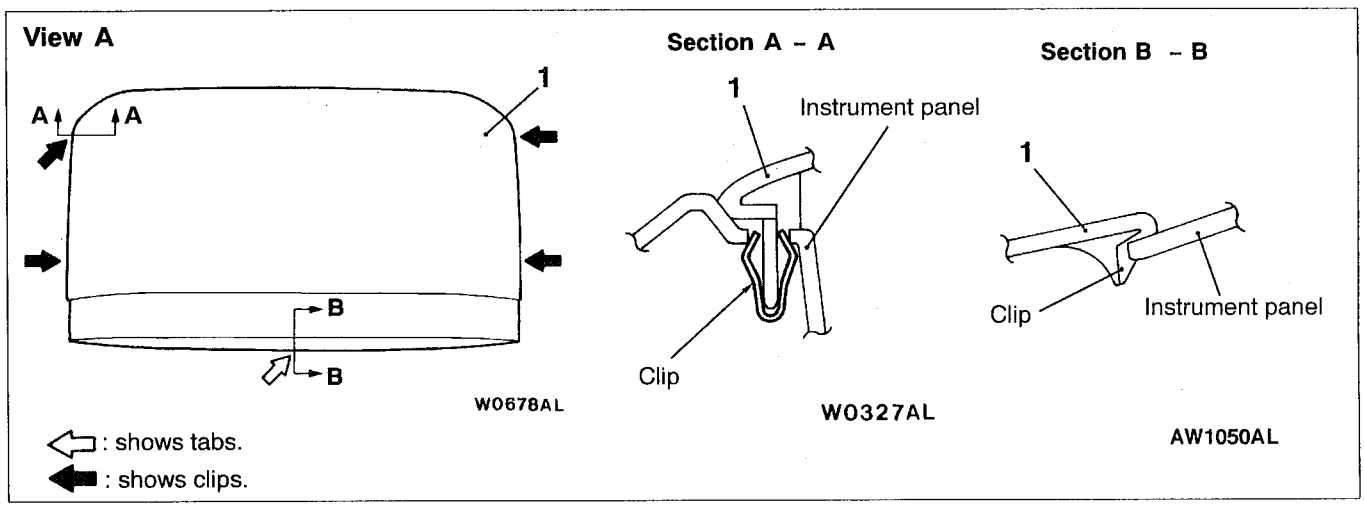

Removal steps

1. Center display hood
2. Bracket
3. Clock

RADIO AND TAPE PLAYER

TROUBLESHOOTING

QUICK-REFERENCE TROUBLESHOOTING CHART

Items	Problem symptom	Relevant chart
Noise	Noise appears at certain places when travelling.	A-1
	Mixed with noise, only at night.	A-2
	Broadcasts can be heard but UKW/MW/LW has a lot of noise.	A-3
	There is noise when starting the engine.	A-4
	Some noise appears when there is vibration or shocks during travelling.	A-5
	Ever-present noise.	A-6
Radio	When switch is set to ON, no power is available.	B-1
	No sound from one speaker.	B-2
	There is noise but no reception for UKW/MW/LW or no sound from UKW/MW/LW.	B-3
	Insufficient sensitivity.	B-4
	Distortion on UKW/MW/LW.	B-5
	Too few automatic select stations.	B-6
	Insufficient memory (preset stations are erased).	B-7
Tape player	Cassette tape will not be inserted.	C-1
	No sound.	C-2
	No sound from one speaker.	C-3
	Sound quality is poor, or sound is weak.	C-4
	Cassette tape will not be ejected.	C-5
	Uneven revolution. Tape speed is fast or slow.	C-6
	Faulty auto reverse.	C-7
	Tape gets caught in mechanism.	C-8

CHART

A. NOISE

A-1 Noise appears at certain places when travelling.

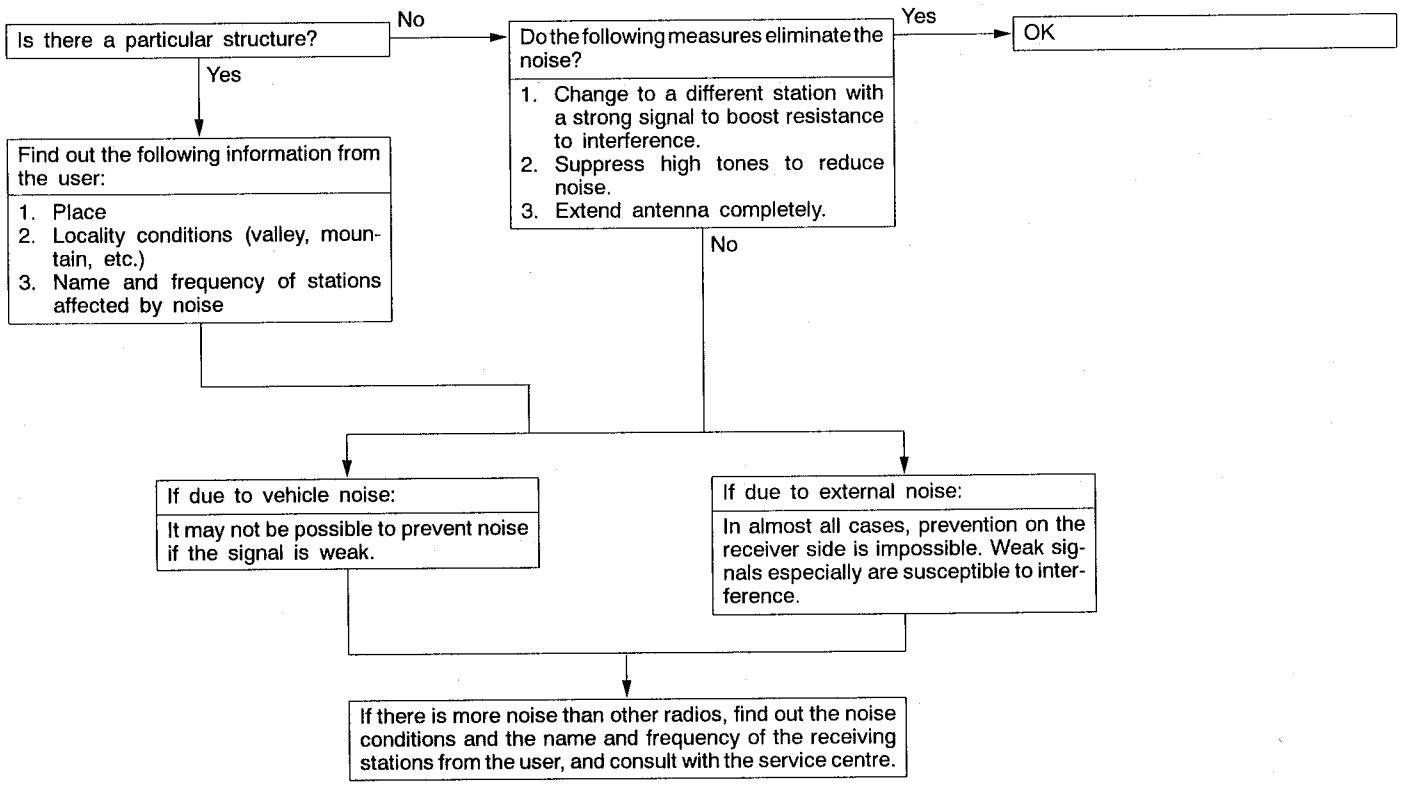

A-2 Mixed with noise, only at night.

The following factors can be considered as possible causes of noise appearing at night.

1. Factors due to signal conditions: Due to the fact that long-distance signals are more easily received at night, even stations that are received without problem during the day may experience interference in a general worsening of reception conditions. The weaker a station is the more susceptible it is to interference, and a change to a different station or the appearance of a beating sound* may occur.
   Beat sound*: Two signals close in frequency interfere with each other, creating a repetitious high-pitched sound. This sound is generated not only by sound signals but by electrical waves as well.
2. Factors due to vehicle noise: Alternator noise may be a cause.

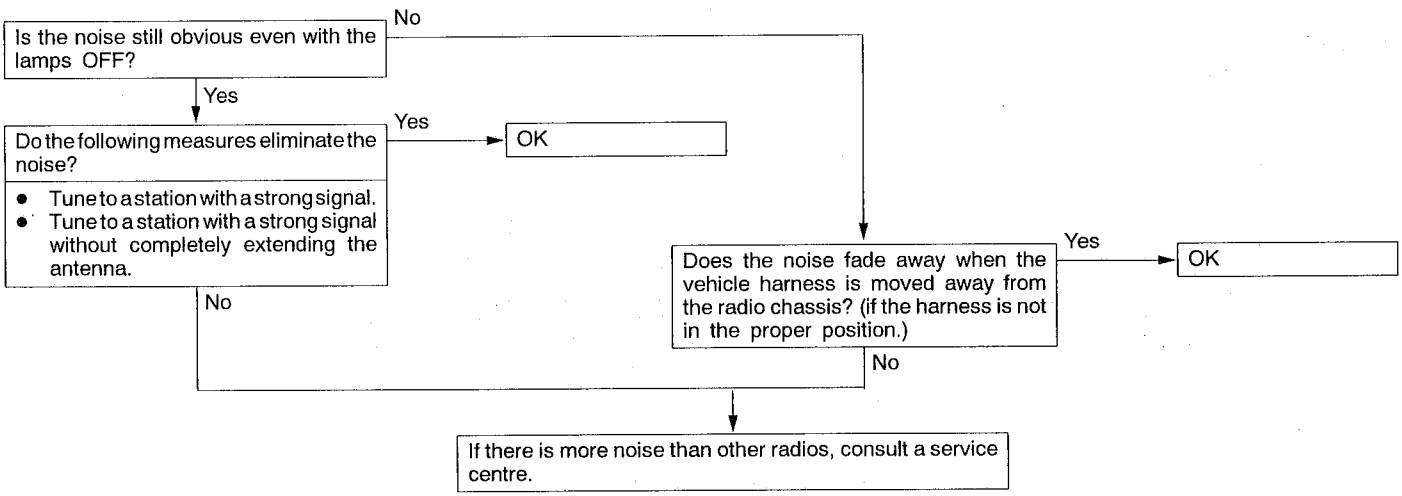

A-3 Broadcasts can be heard but UKW/MW/LW has a lot of noise.

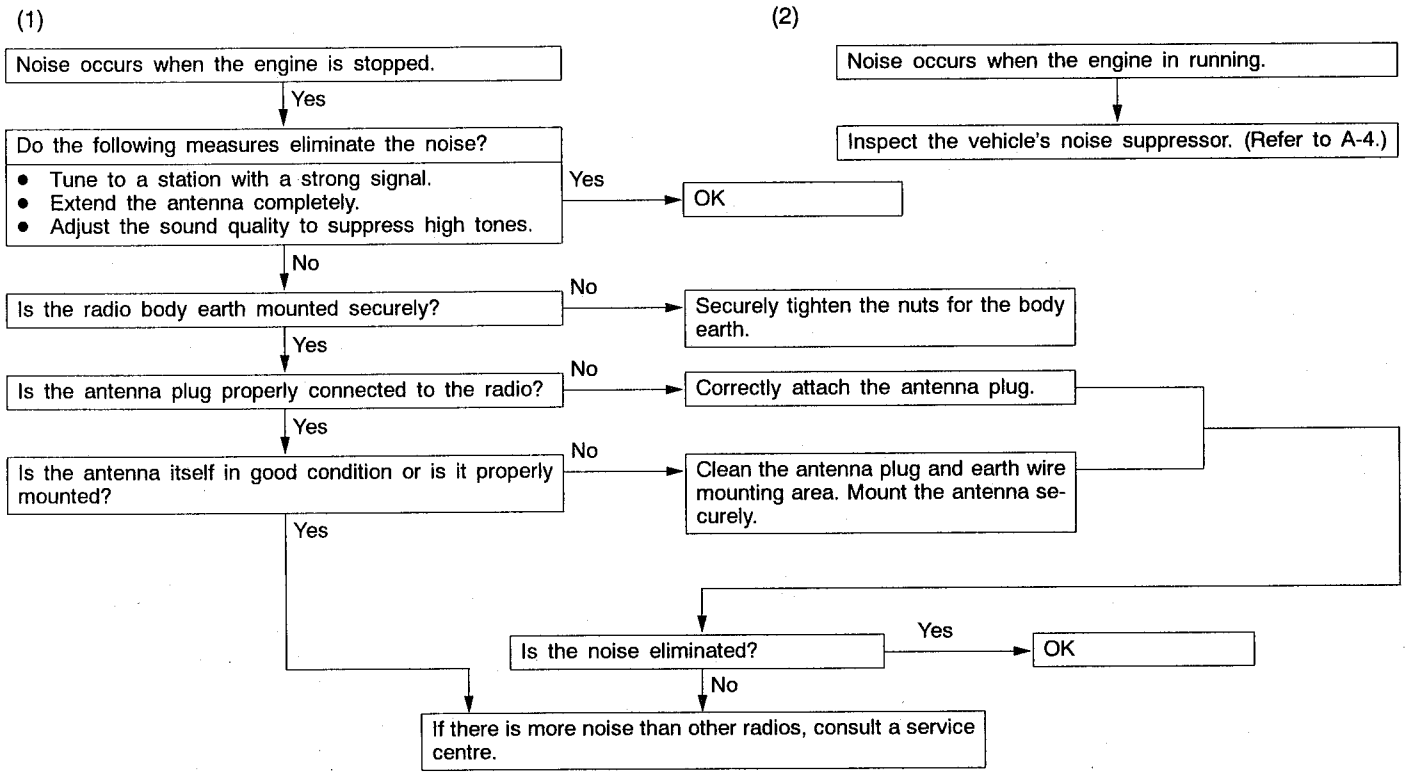

A-4 There is noise when starting the engine.

Noise type Sounds are in parentheses ( ).	Conditions	Cause	Remedy
UKW/MW/LW: Ignition noise (Popping, snapping, cracking, buzzing)	• Increasing the engine speed causing the popping sound to speed up, and volume decreases. • Disappears when the ignition switch is turned to ACC.	• Mainly due to the spark plugs. • Due to the engine noise.	• Check or replace the earth cable. (Refer to Fig. 1, 2 and 3 on P.54-58 and 54-59.) • Check or replace the noise capacitor.
Other electrical components	–	Noise may appear as electrical components become older.	Repair or replace electrical components.
Static electricity (Cracking, crinkling)	• Disappears when the vehicle is completely stopped. • Severe when the clutch is engaged.	Occurs when parts or wiring move for some reason and contact metal parts of the body.	Return parts or wiring to their proper position.
	• Various noises are produced depending on the body part of the vehicle.	Due to detachment from the body of the front hood, bumpers, exhaust pipe and muffler, suspension, etc.	Tighten the mounting bolts securely. Cases where the problem is not eliminated by a single response to one area are common, due to several body parts being imperfectly earthed.

Caution

1. **Connecting a high tension cable to the noise filter may destroy the noise filter and should never be done.**
2. **Check that there is no external noise. Since failure caused by this may result in misdiagnosis due to inability to identify the noise source, this operation must be performed.**
3. **Noise prevention should be performed by suppressing strong sources of noise step by step.**

NOTE

1. Capacitor
   The capacitor does not pass D.C. current, but as the number of waves increases when it passes A.C. current, impedance (resistance against A.C.) decreases, and current flow is facilitated. A noise suppressing condenser which takes advantage of this property is inserted between the power line for the noise source and the earth. This suppresses noise by earthing the noise component (A.C. or pulse signal) to the body of the vehicle.
2. Coil
   The coil passes D.C. current, but impedance rises as the number of waves increases relative to the A.C. current. A noise suppressing coil which takes advantage of this property is inserted into the power line for the noise source, and works by preventing the noise component from flowing or radiating out of the line.

Fig. 1 <4G1> — Earth cable

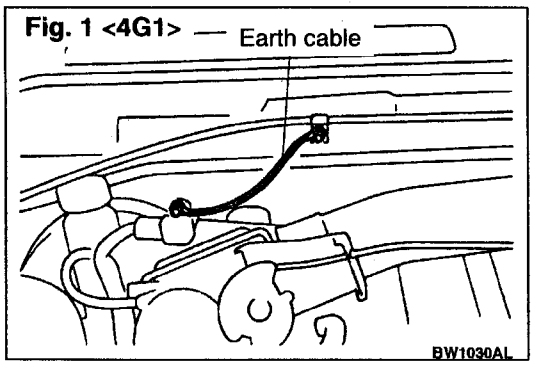

Fig. 2 <4G9-MPI> Earth cable

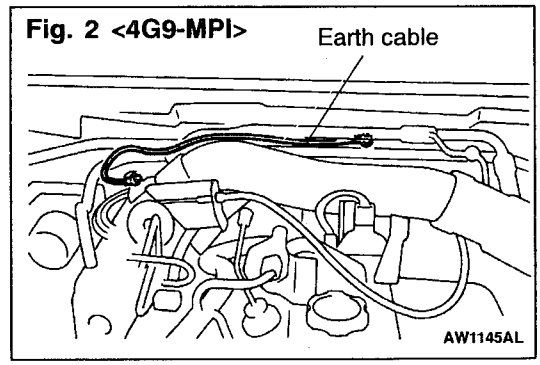

Fig. 3 <4G9-GDI>

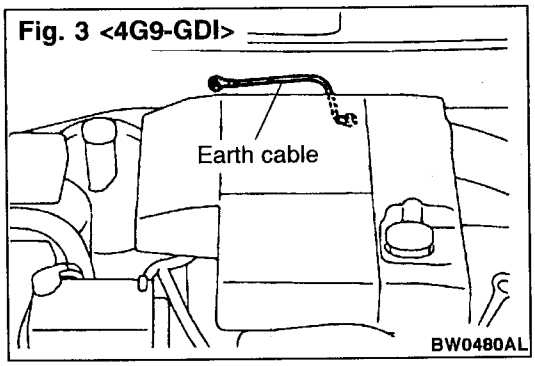

A-5 Some noise appears when there is vibration or shocks during travelling.

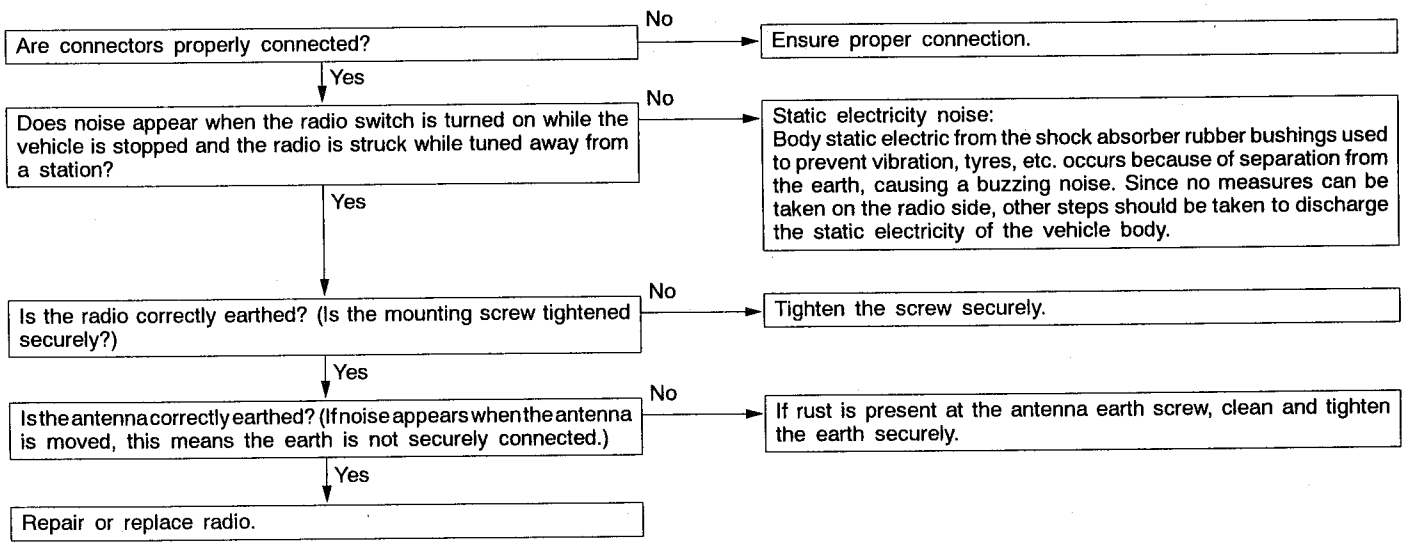

A-6 Ever-present noise.

Noise is often created by the following factors, and often the radio is OK when it is checked individually.

- Travelling conditions of the vehicle
- Terrain of area travelled through
- Surrounding buildings
- Signal conditions
- Time period

For this reason, if there are still problems with noise even after the measures described in steps A-1 to A-8 have been taken, get information on the factors listed above as well as determining whether the problem occurs with UKW/MW/LW, the station names, frequencies, etc., and contact a service centre.

B. RADIO

B-1 No power is supplied when the switch is set to ON.

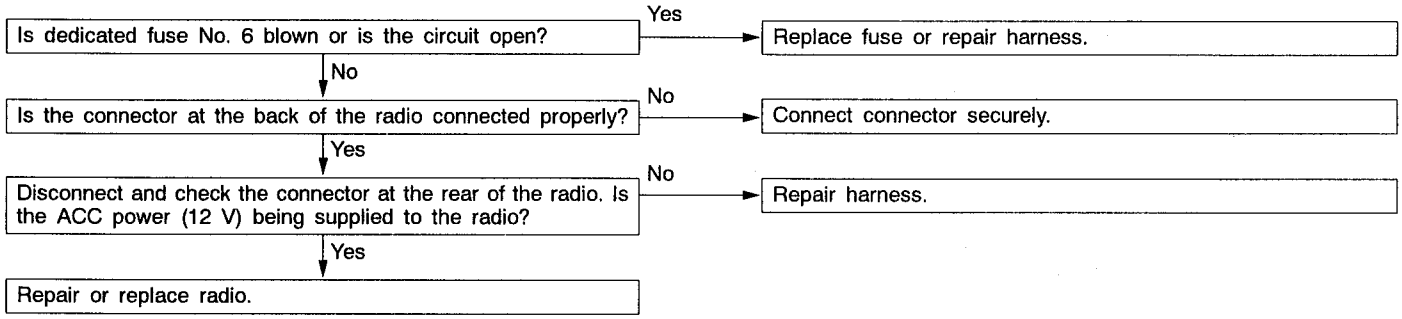

B-2 No sound from one speaker.

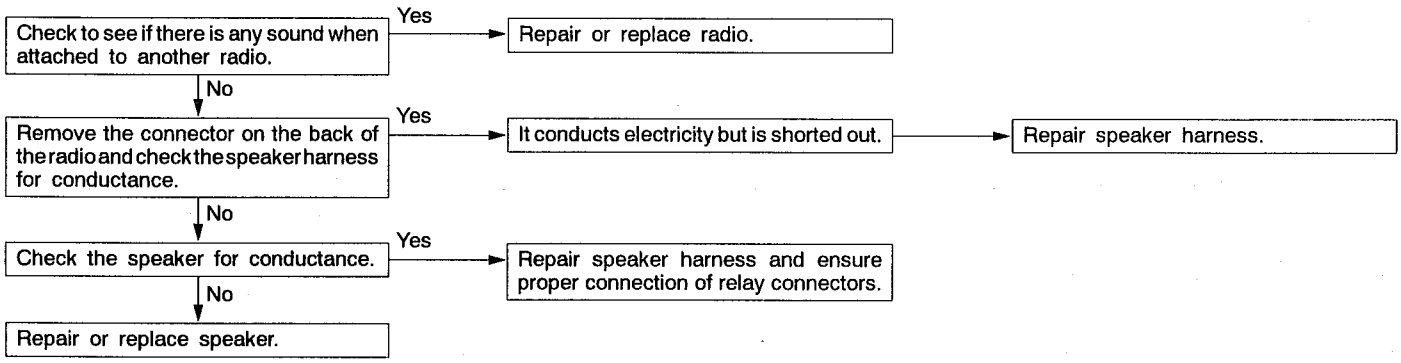

B-3 There is noise but no reception for UKW/MW/LW or no sound from UKW/MW/LW.

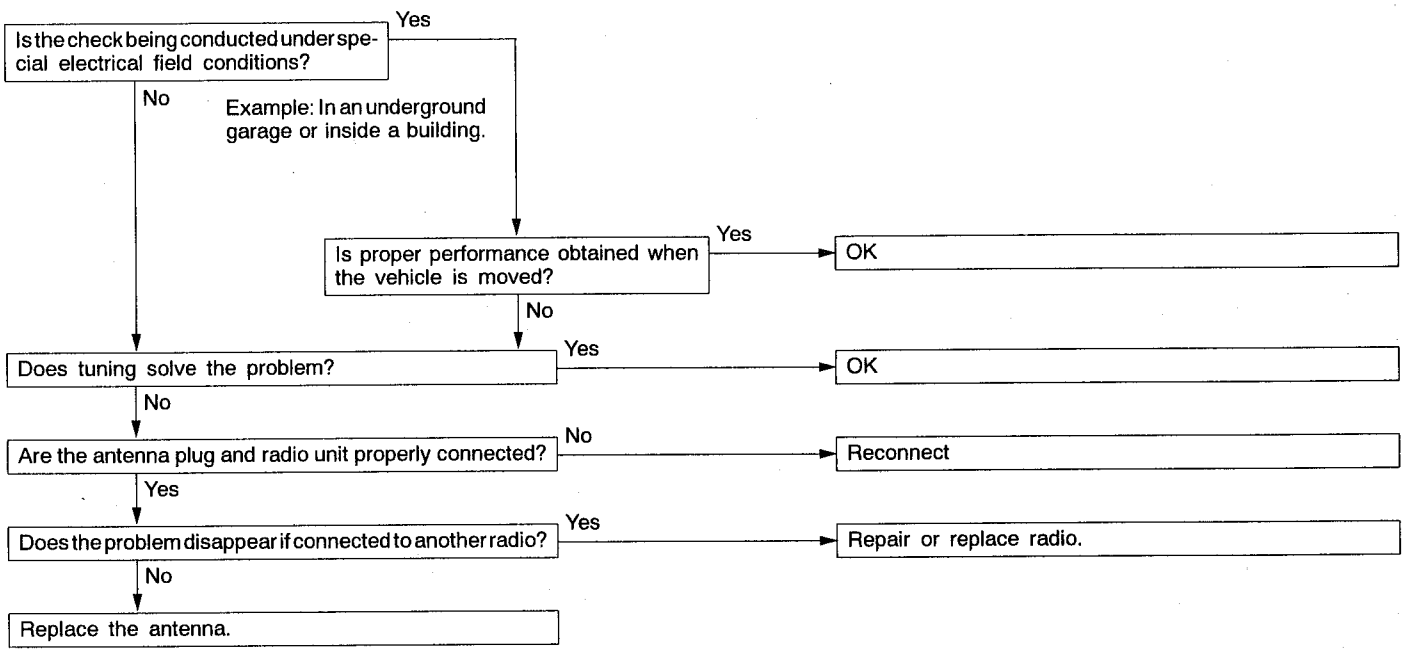

B-4 Insufficient sensitivity.

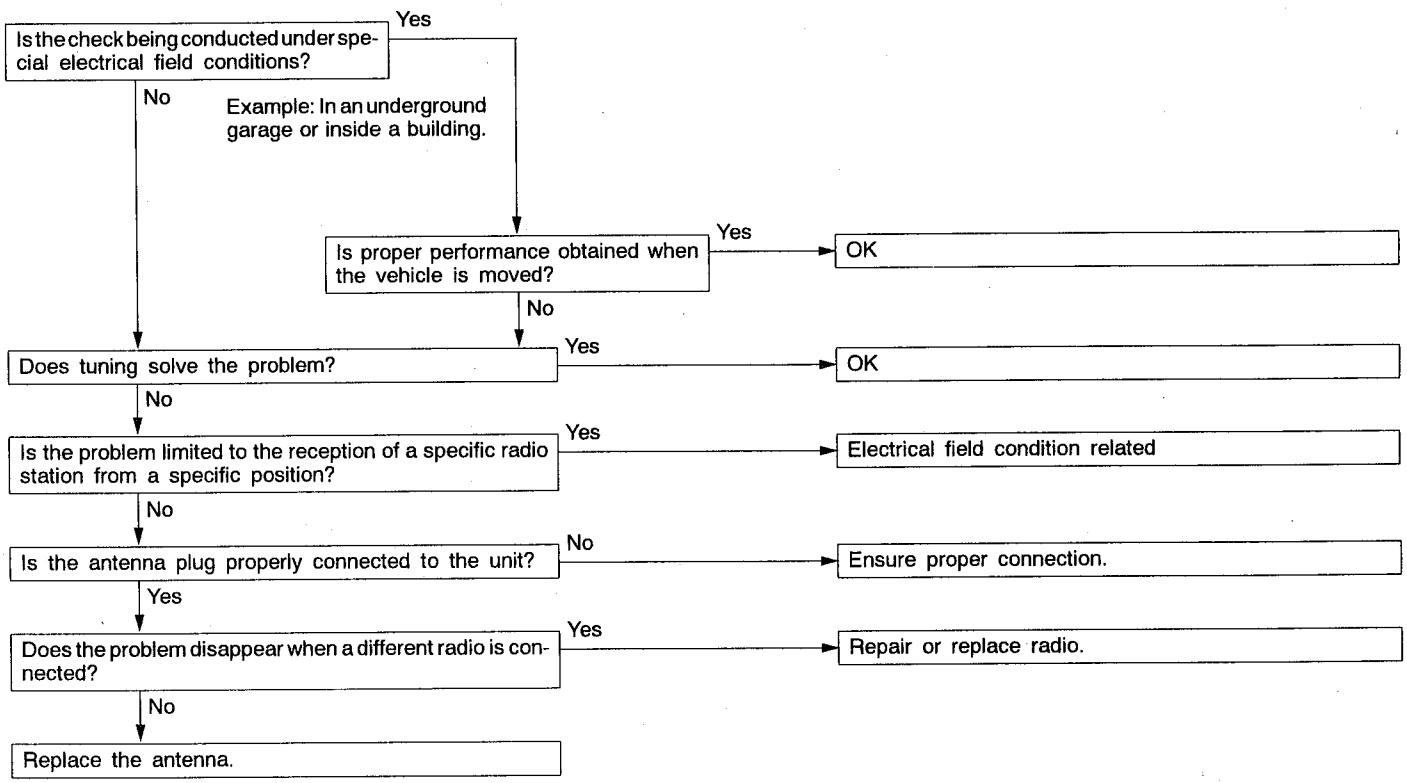

B-5 Distortion on UKW/MW/LW.

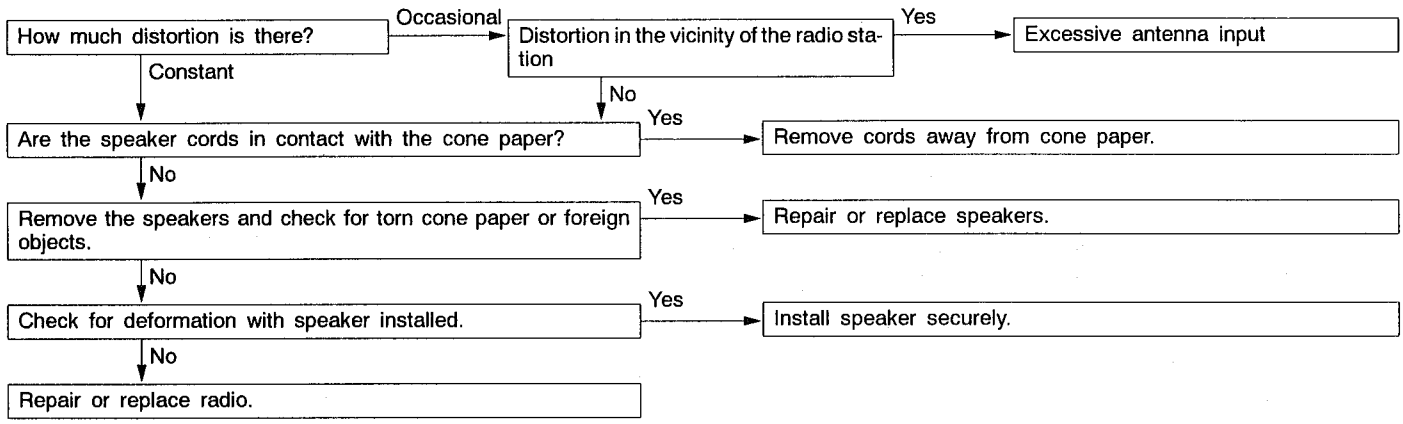

B-6 Too few automatic select stations.

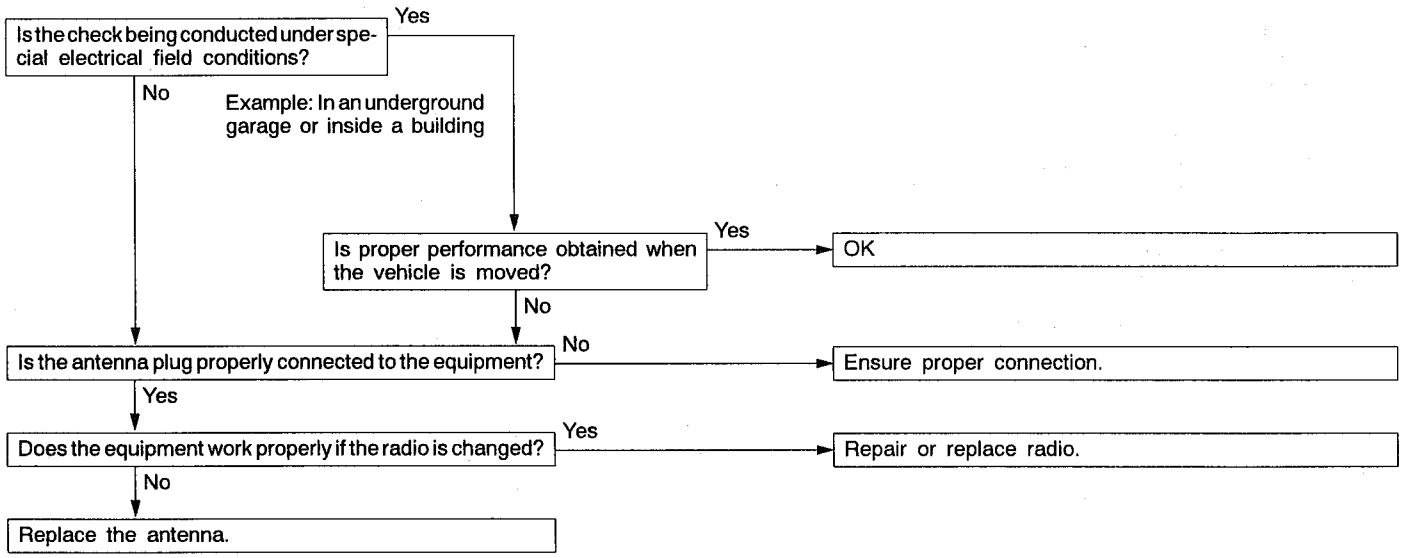

B-7 Insufficient memory (preset stations are erased).

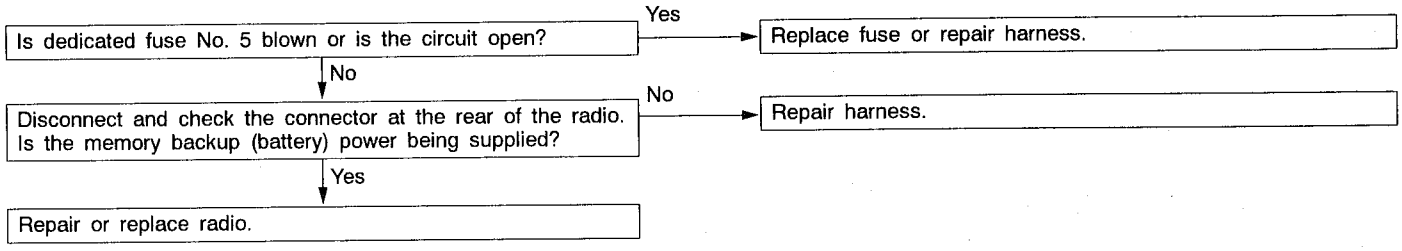

C. TAPE PLAYER

C-1 Cassette tape will not be inserted.

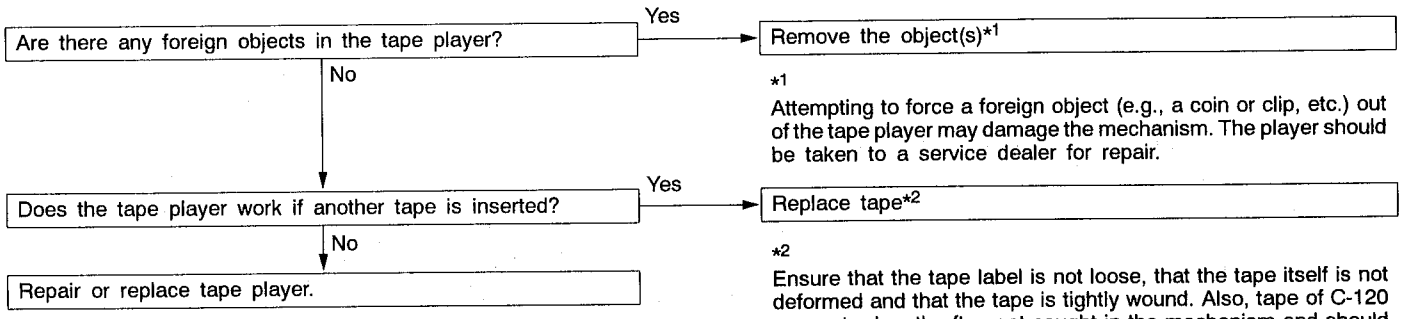

*1
Attempting to force a foreign object (e.g., a coin or clip, etc.) out of the tape player may damage the mechanism. The player should be taken to a service dealer for repair.

*2
Ensure that the tape label is not loose, that the tape itself is not deformed and that the tape is tightly wound. Also, tape of C-120 or greater length often get caught in the mechanism and should not be used.

C-2 No sound (even after a tape has been inserted).

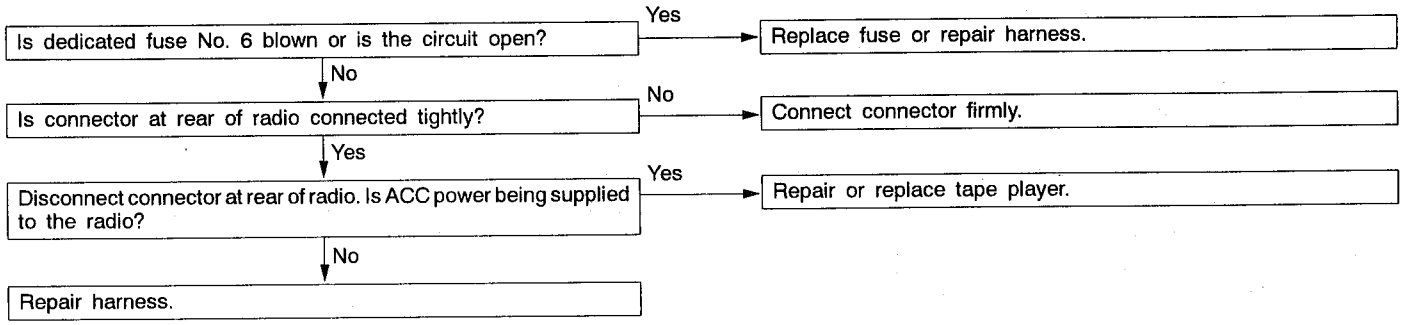

C-3 No sound from one speaker.

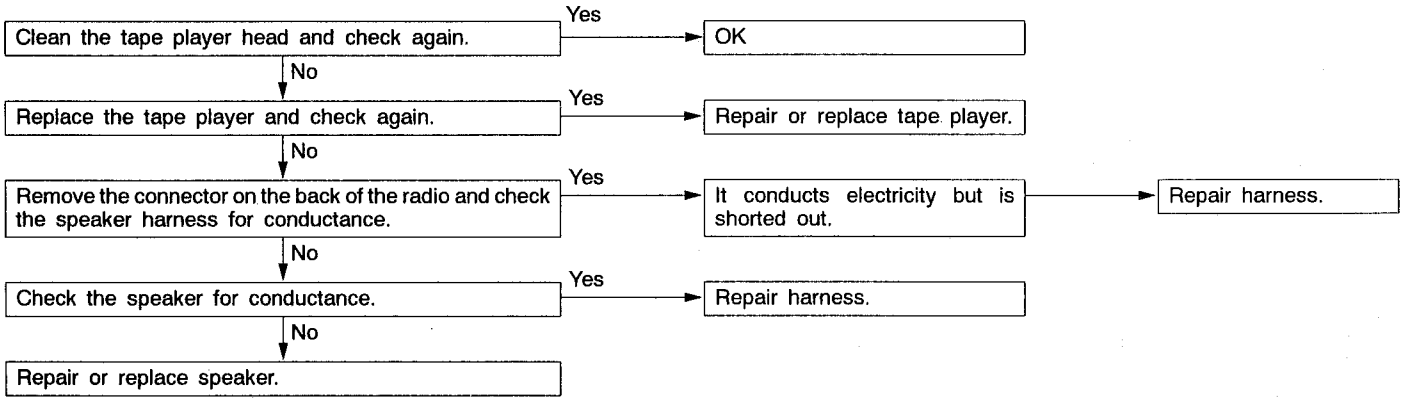

C-4 Sound quality is poor, or sound is weak.

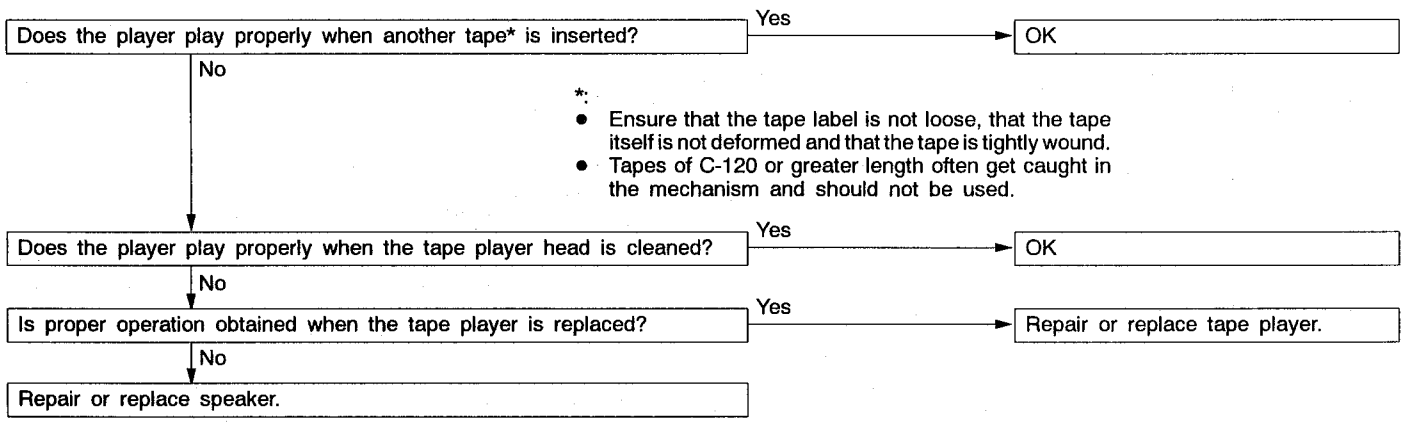

C-5 Cassette tape will not be ejected.

The problems covered here are all the result of the use of a bad tape (deformed or not properly tightened) or of a malfunction of the tape player itself. Malfunctions involving the tape becoming caught in the mechanism and ruining the case are also possible, and attempting to force the tape out of the player can cause damage to the mechanism. The player should be taken to a service dealer for repair.

C-6 Uneven revolution. Tape speed is fast or slow.

Does the player play OK if the tape*1 is changed?
- Yes → OK
- No

*1
Ensure that the tape label is not loose, that the tape itself is not deformed and that the tape is tightly wound. Also, tape of C-120 or greater length often get caught in the mechanism and should not be used.

Are there any foreign objects *2 inside the tape player?
- Yes → Remove foreign object(s).
- No

*2
Attempting to force a foreign object (e.g., a coin or clip, etc.) out of the tape player may damage the mechanism. The player should be taken to a service dealer for repair.

Is the head or capstan roller dirty? (Refer to the illustration below.)
- Yes → Clean.
- No

Repair or replace tape player.

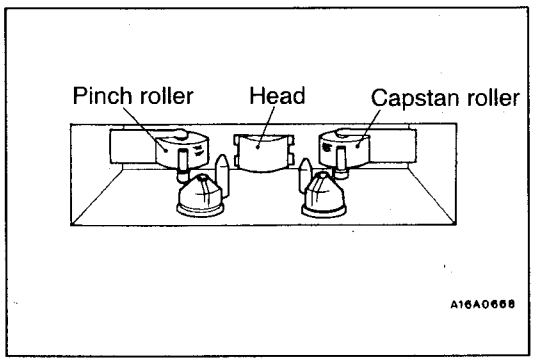

C-7 Faulty auto reverse.

Does the player play OK if the tape* is changed?
- Yes → OK
- No

*:
- Ensure that the tape label is not loose, that the tape itself is not deformed and that the tape is tightly wound.
- Tapes of C-120 or greater length often get caught in the mechanism and should not be used.

Does the problem only occur while the vehicle is being driven?
- No → Repair or replace tape player.
- Yes

Is the tape player properly installed to the vehicle?
- No → Ensure tape player installation.
- Yes

Repair or replace tape player.

C-8 Tape gets caught in mechanism*1.

*1
When the tape is caught in the mechanism, the case may not eject. When this occurs, do not try to force the tape out as this may damage the tape player mechanism. Take the cassette to a service dealer for repair.

Does the player play OK if the tape*2 is changed?

Yes → Tape used is bad.

No → Repair or replace tape player.

*2
Ensure that the tape label is not loose, that the tape itself is not deformed and that the tape is tightly wound. Also, tapes of C-120 or greater length often get caught in the mechanism and should not be used.

RADIO AND TAPE PLAYER

REMOVAL AND INSTALLATION

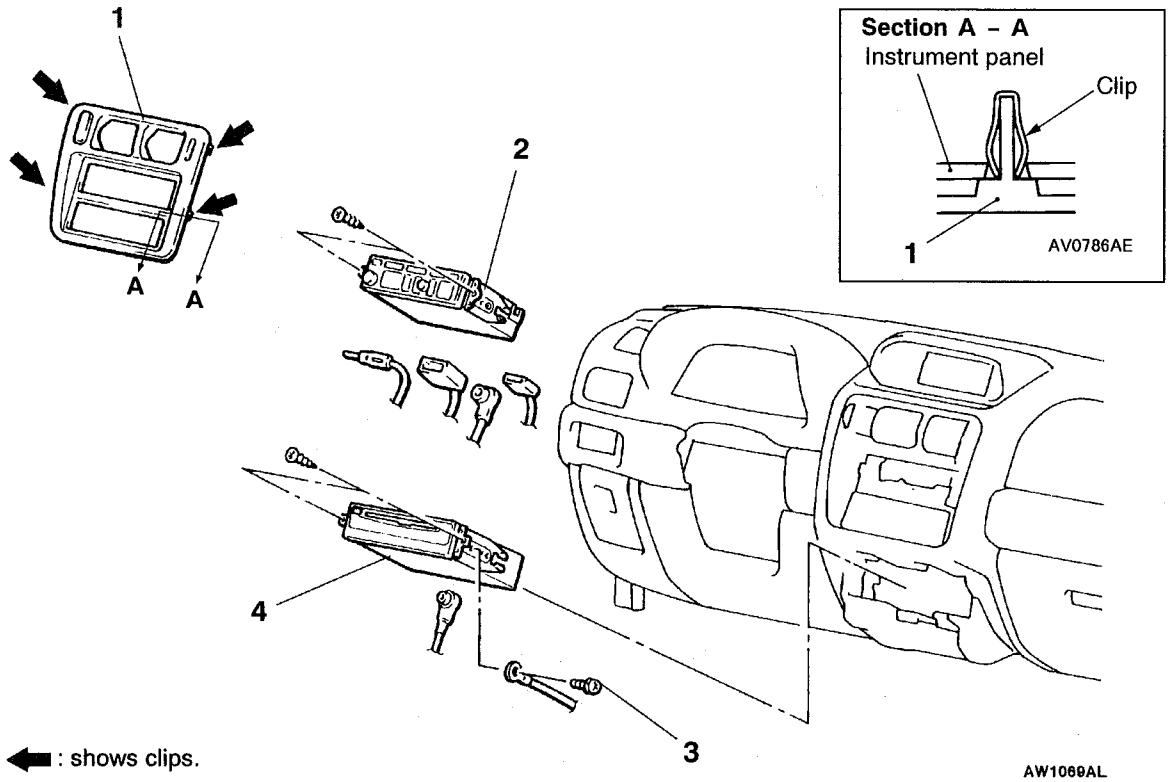

Radio and tape player removal steps

1. Center panel
2. Radio and tape player

CD player removal steps

3. Earth cable attaching screw
4. CD player

CD AUTOCHANGER

REMOVAL AND INSTALLATION

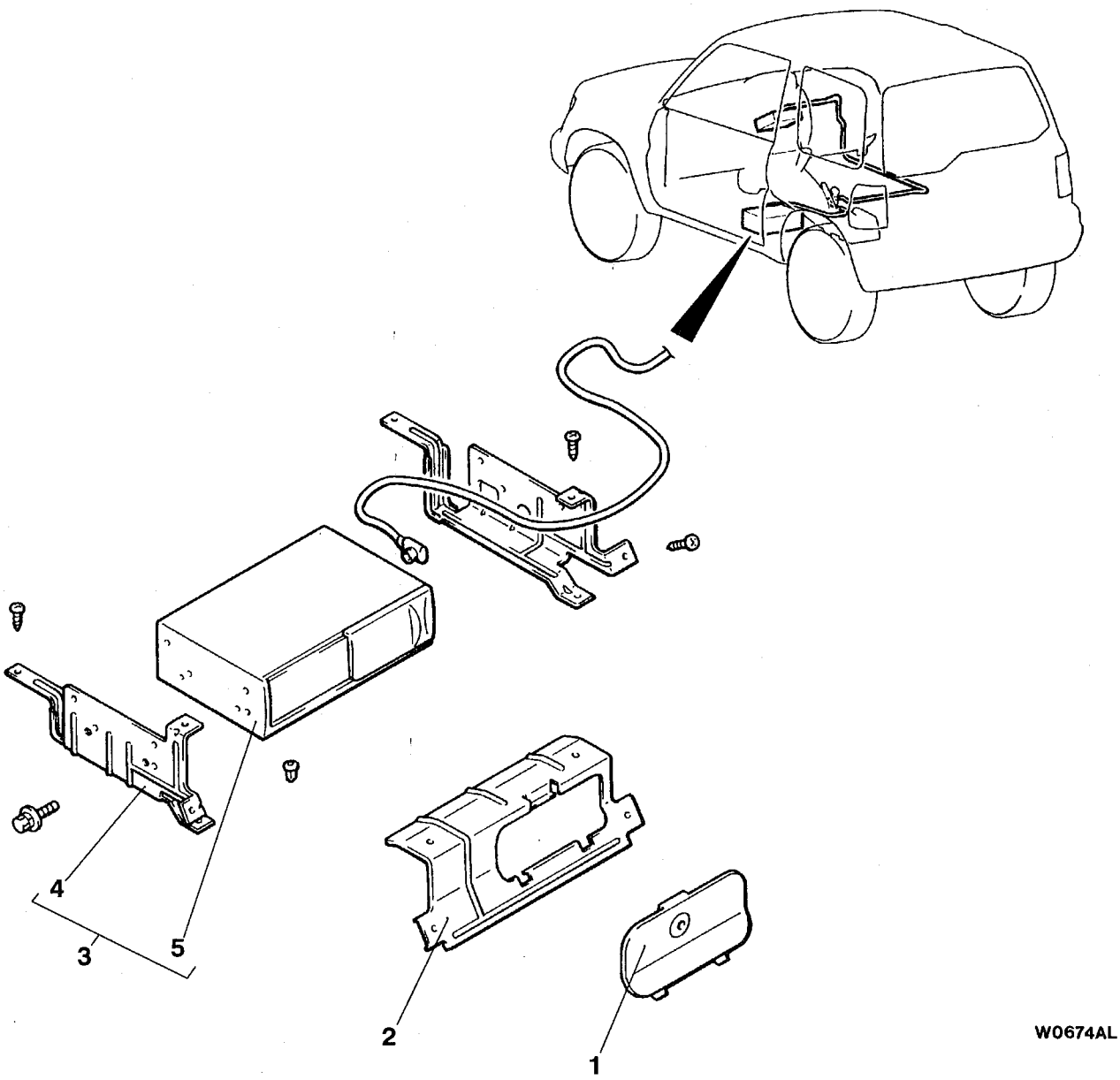

Removal steps

- Front seat (LH)

1. Lid
2. Cover
3. CD autochanger assembly
4. Bracket
5. CD autochanger

SPEAKER

REMOVAL AND INSTALLATION

<Front speaker>

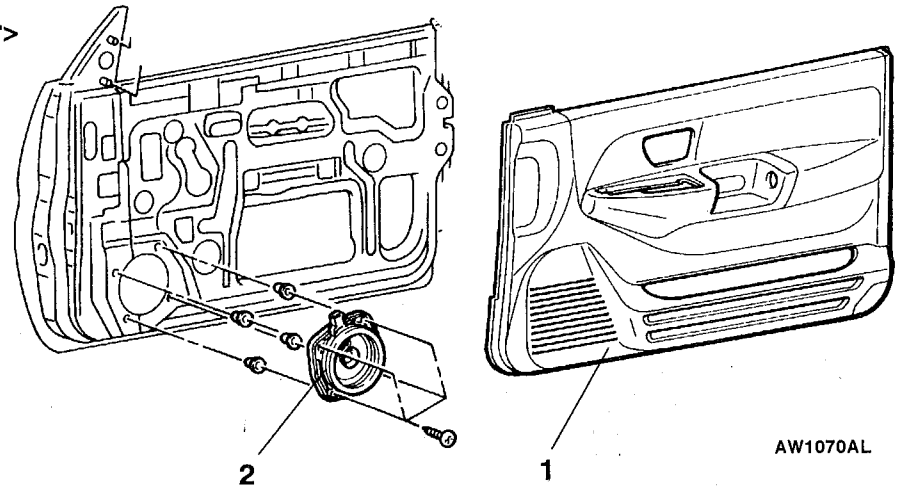

<Rear speaker>

3-door models

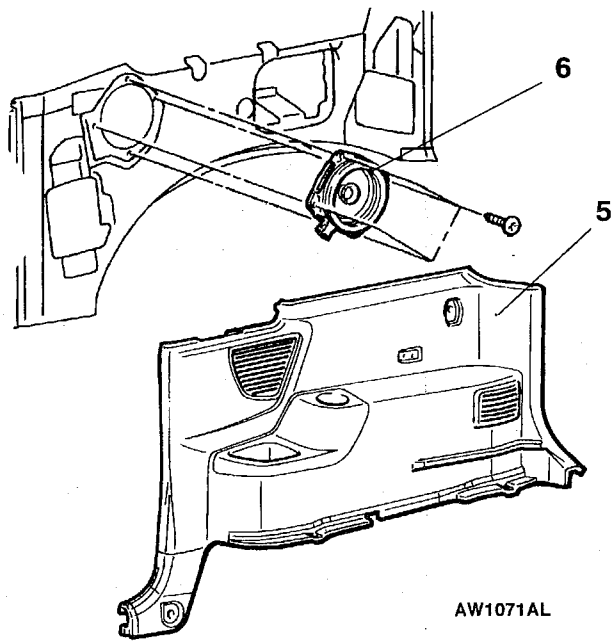

5-door models

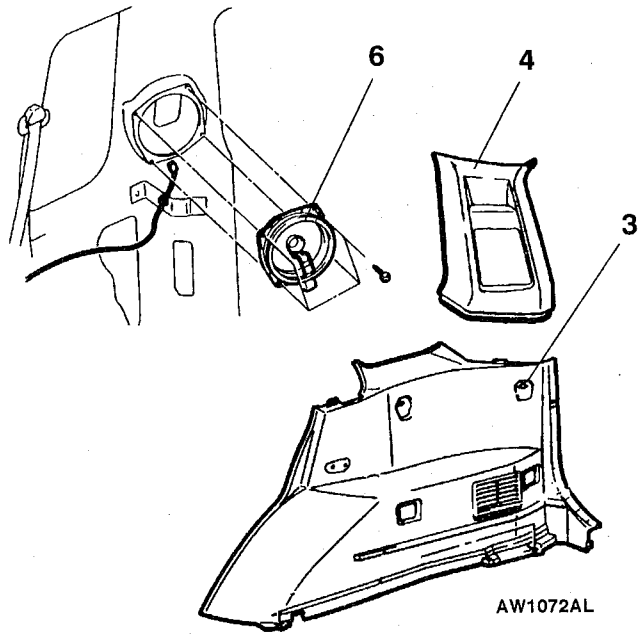

Front speaker removal steps

1. Front door trim (Refer to GROUP 42.)
2. Speaker

Rear speaker removal steps

3. Quarter trim, lower (Refer to GROUP 52A.)
4. Rear pillar trim (Refer to GROUP 52A.)
5. Quarter trim (Refer to GROUP 52A.)
6. Speaker

ANTENNA

REMOVAL AND INSTALLATION

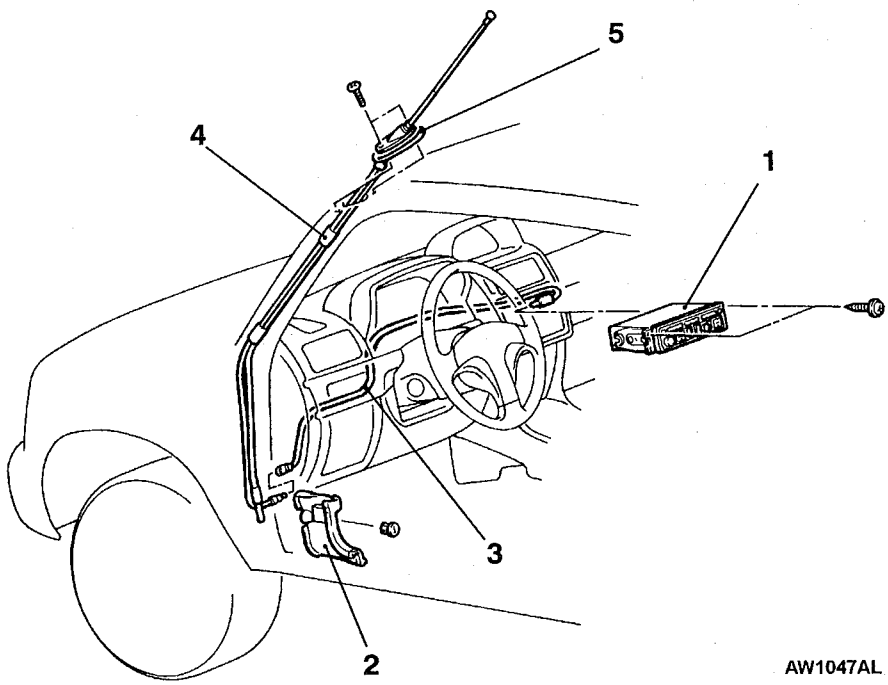

Removal steps

- Center panel (Refer to P.54-67.)

1. Radio and tape player (Refer to P.54-67.)

- Instrument under cover (Refer to GROUP 52A.)

◀A▶

2. Cowl side trim (Refer to GROUP 52A)
3. Antenna feeder
4. Antenna assembly
5. Antenna base

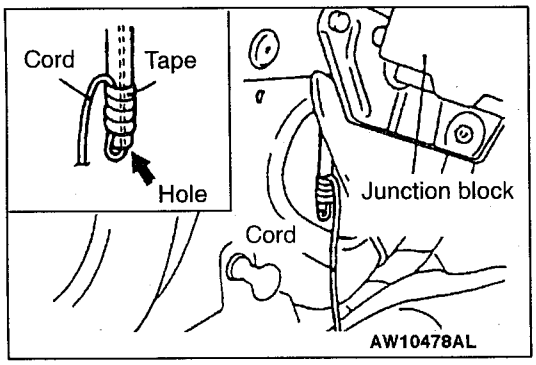

REMOVAL SERVICE POINT

◀A▶ ANTENNA ASSEMBLY REMOVAL

Observe the following steps to make the feeder cable of the antenna to be routed easily during reinstallation.

1. Secure a cord to the end of the feeder cable.
2. Pull out the feeder cable slightly until the tube end of the antenna can been seen.
3. Insert a cord into the tube end, and secure the cord with plastic tape as shown.

   Caution
   Make sure that the cord is not loosened.

4. Remove the antenna assembly by pulling it gradually.

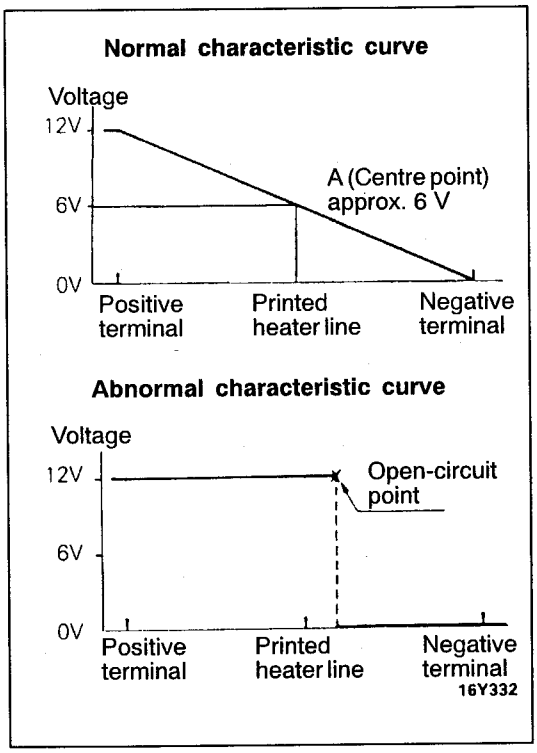

REAR WINDOW DEFOGGER

ON-VEHICLE SERVICE

PRINTED-HEATER LINE CHECK

1. Run engine at 2,000 r/min. Check heater element with battery at full.
2. Turn ON rear window defogger switch. Measure heater element voltage with circuit tester at rear window glass centre A.
   Condition is good if it indicates about 6 V.
3. If 12 V is indicated at A, there is a break in the negative terminals from A.
   Move test bar slowly to negative terminal to detect where voltage changes suddenly (0V).
4. If 0 V is indicated at A, there is a break in the positive terminals from A. Defect where the voltage changes suddenly (12 V) in the same method described above.

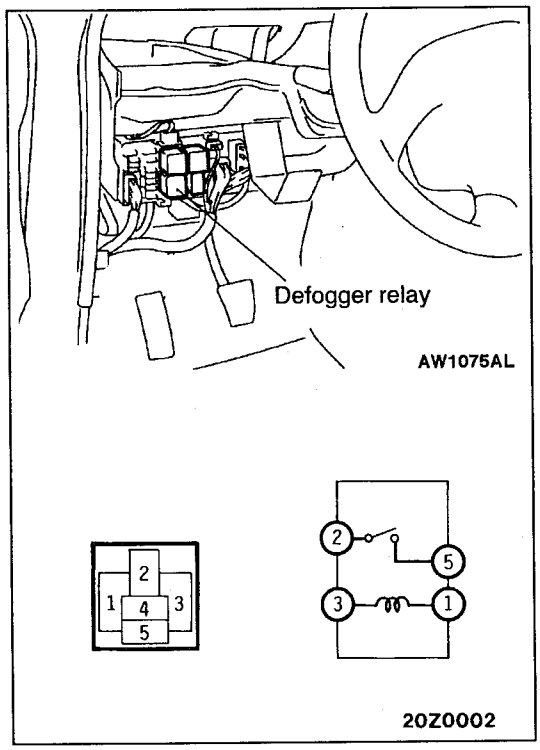

REAR WINDOW DEFOGGER RELAY CONTINUITY CHECK

Battery voltage	Terminal No.			
	1	2	3	5
Power is not supplied	○		○	
Power is supplied	⊕		⊖	
		○		○

REAR WINDOW DEFOGGER SWITCH

REMOVAL AND INSTALLATION

Refer to GROUP 55 – Heater Control.

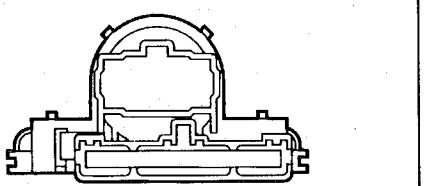

<Vehicles for Hong Kong>

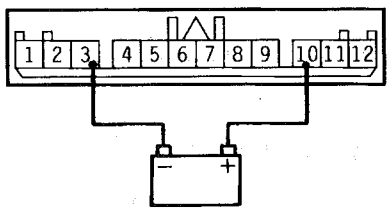

<Except vehicles for Hong Kong>

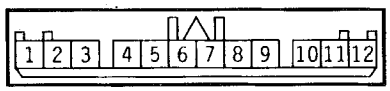

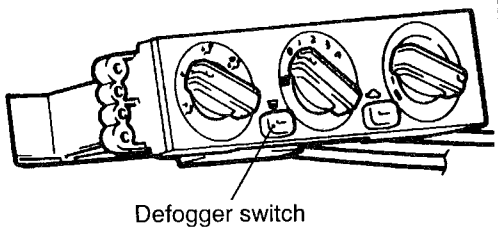

AW1079AL

INSPECTION

DEFOGGER SWITCH CONTINUITY CHECK <Vehicles for Hong Kong>

Switch position	Terminal No.				
	3	10	–	11	12
OFF			IND		
ON			IND		

NOTE
Turn on the defogger switch, and then check that there is continuity between the terminals 3 and 12 for 9 to 13 minutes and after it, the defogger switch is turned off.

<Except vehicles for Hong Kong>

Switch position	Terminal No.			
	10	–	11	12
OFF		IND		
ON		IND		

SMART WIRING SYSTEM (SWS)

COMMUNICATION LINE

Data lines for multiplex communication are connected between the front-ECU, ETACS-ECU, column switch assembly, sunroof motor, power window main switch, and power window motors as illustrated below.

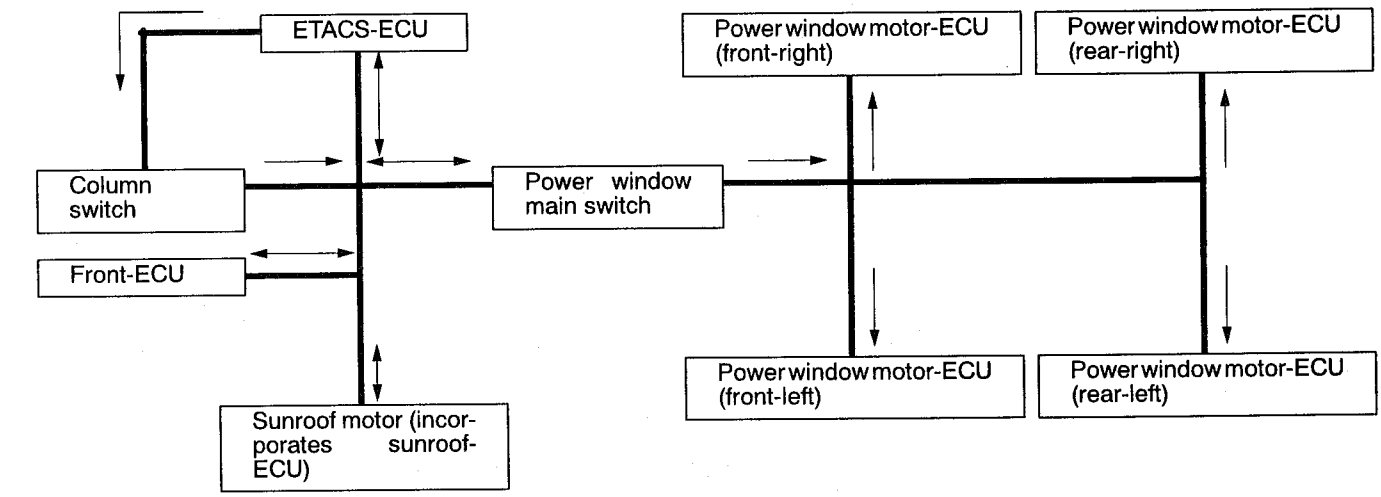

: Uni-directional communication line

: Bi-directional communication line

SPECIAL TOOLS

Tool	Number	Name	Use
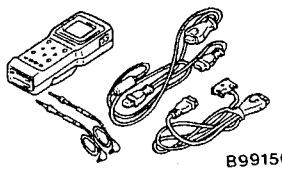 B991502	MB991502	MUT-II sub assembly	Checking of the SWS (Diagnosis code display and input check with the MUT-II)
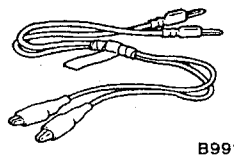 B991529	MB991529	Diagnosis code check harness	Simple diagnosis

Tool	Number	Name	Use
A 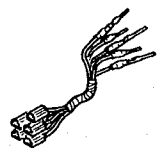 B 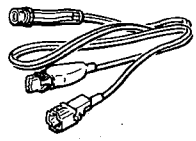 C 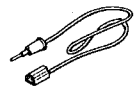 D  C991223	MB991223 A: MB991219 B: MB991220 C: MB991221 D: MB991222	Harness set A: Test harness B: LED harness C: LED harness adapter D: Probe	Measurement of terminal voltage at ECUs A: Connector pin contact pressure inspection B: Power circuit inspection C: Power circuit inspection D: Commercial tester connection

TROUBLESHOOTING

STANDARD FLOW OF DIAGNOSTIC TROUBLESHOOTING

Refer to GROUP 00 – How to Use Troubleshooting/Inspection Service Points.)

DIAGNOSTIC FUNCTION

DIAGNOSIS CODES CHECK

Use the MUT-II or the simple diagnosis mode to check a diagnosis code.
(Refer to GROUP 00 – How to Use Troubleshooting/Inspection Service Points.)

NOTE
Connect the MUT-II to the 16-pin diagnosis connector (black).

ERASING DIAGNOSIS CODE

Refer to GROUP 00 – How to Use Troubleshooting/Inspection Service Points.

CHECK BY USING SIMPLE DIAGNOSIS MODE

(1) Set the MUT-II to simple diagnosis mode, and then select the switch diagnosis mode.
(Refer to GROUP 00 – How to Use Troubleshooting/Inspection Service Points.)
(2) In this condition, the following input switches can be checked.

Input Signal Check Function

Input signal		Buzzer/LED operation condition
ETACS	Ignition switch (IG1)	Turned from OFF to ON
	Ignition switch (ACC)	Turned from OFF to ACC
	Front door switch (driver's side)	Driver's door opened from closed condition
	Door switches	All doors closed to any door opened
	Key reminder switch	Ignition key removed from ignition key cylinder (from inserted position)
	Front door lock actuator (driver's side)	Driver's door lock knob moved from lock position to unlock position or vice versa
	Front door key switch (passenger's side)	Passenger's door locked or unlocked using ignition key
	Back door key switch	Back door locked or unlocked using ignition key
	Hazard lamp switch	Turned from OFF to ON
	Front fog lamp switch	
	Back-up lamp switch <M/T>	Shift lever moved to R position
	Inhibitor switch (reverse) <A/T>	Selector lever moved to R position
	Keyless entry transmitter (LOCK and UNLOCK switches)	LOCK or UNLOCK switch turned OFF to ON
Column switch assembly	Tail lamp switch	Lighting switch turned to tail lamp position from any other position
	Headlamp switch	Lighting switch turned to headlamp position from any other position
	Dimmer switch	Turned from OFF to ON
	Passing switch	
	Right-hand turn signal switch	
	Left-hand turn signal switch	
	Windshield mist wiper switch	
	Windshield wiper and washer switches	
	Windshield wiper INT switch	
	Windshield wiper LO switch	
	Windshield wiper HI switch	
	Rear wiper INT switch	
	Rear wiper and washer switches	
	Headlamp washer switch	
Power window switches	Any switch	Turned from OFF to ON
Sunroof	Any switch	

DIAGNOSIS CODE CHART

Code No.	Diagnosis item	Reference page
11	Failure concerning the ETACS-ECU	54-76
12	Failure concerning the column switch or improper connection with the ETACS-ECU	54-76
13	Failure concerning the front-ECU	54-77
21	Short circuit in communication line	54-77

DIAGNOSIS CODE INSPECTION PROCEDURES

Code No.11 Failure concerning the ETACS-ECU	**Probable cause**
The ETACS-ECU monitors its own communication data, and sends a diagnosis code when an error takes place consecutive fifteen times in 0.6 second. The diagnosis code will be erased when the ETACS-ECU determines that its own communication data is sent consecutive 15 times in 0.6 second.	• Malfunction of ETACS-ECU

Replace the ETACS-ECU.

Code No.12 Failure concerning the column switch or improper connection with the ETACS-ECU	**Probable cause**
This diagnosis code is displayed when the column switch sends a signal regardless of the transmission request signal from the ETACS-ECU (three times or more in one second). The diagnosis code is erased when the column switch continues to send a signal according to the transmission request signal from the ETACS-ECU for one second.	• Malfunction of column switch • Malfunction of connector • Malfunction of harness • Malfunction of ETACS-ECU

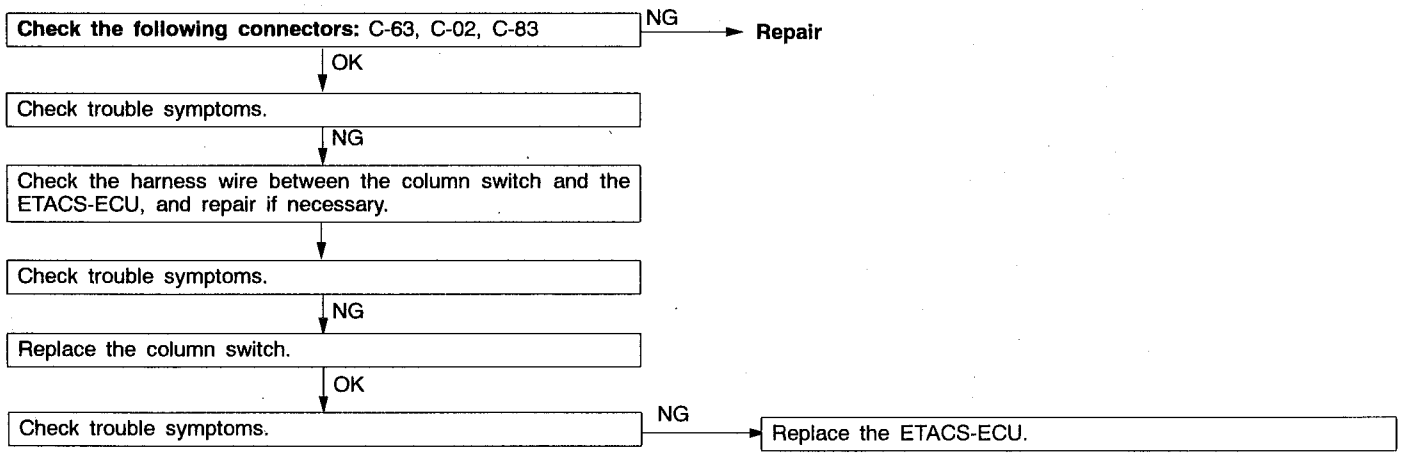

Code No.13 Failure concerning the front-ECU	Probable cause
This diagnosis code is displayed when the signals that the front-ECU sends to the ETACS-ECU are errors consecutive fifteen times in 0.6 second. The diagnosis code will be erased when the front-ECU sends normal signals to the ETACS-ECU consecutive 15 times in 0.6 second.	• Malfunction of the front-ECU • Malfunction of the connector • Malfunction of the harness • Malfunction of the ETACS-ECU

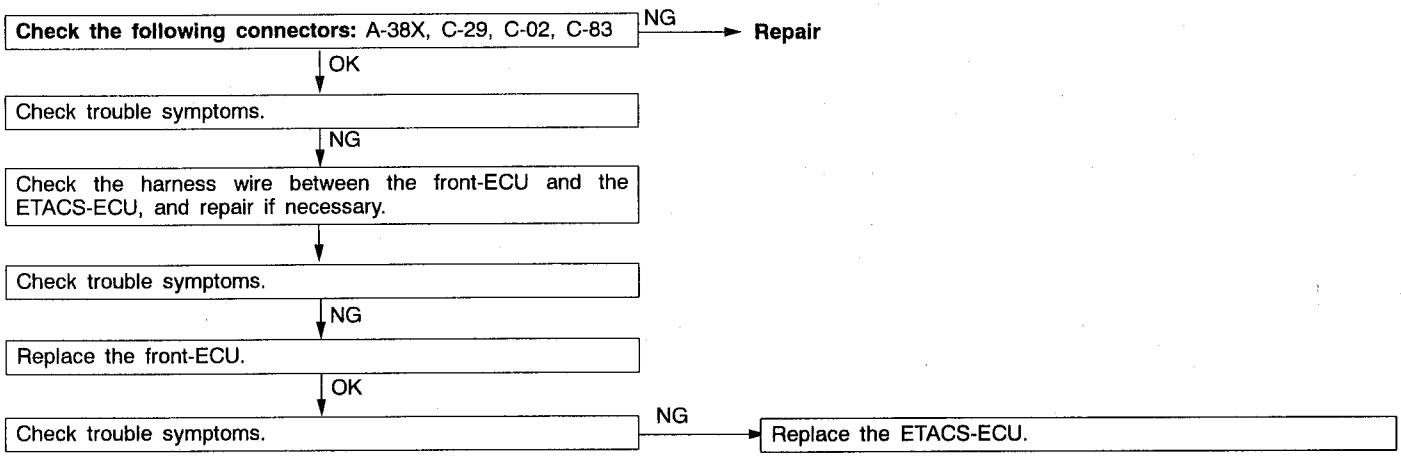

Code No.21 Short circuit in communication line	Probable cause
This diagnosis code is displayed when the SWS communication line voltage reaches the LO level for 0.3 second. The diagnosis code is erased when voltage in the ETACS-ECU data line reaches the HI level for 0.3 second, or the ETACS-ECU receives a normal signal from other ECUs or switches. While this code is displayed, other codes are not displayed.	• Malfunction of the front-ECU • Malfunction of the connector • Malfunction of the harness • Malfunction of the ETACS-ECU

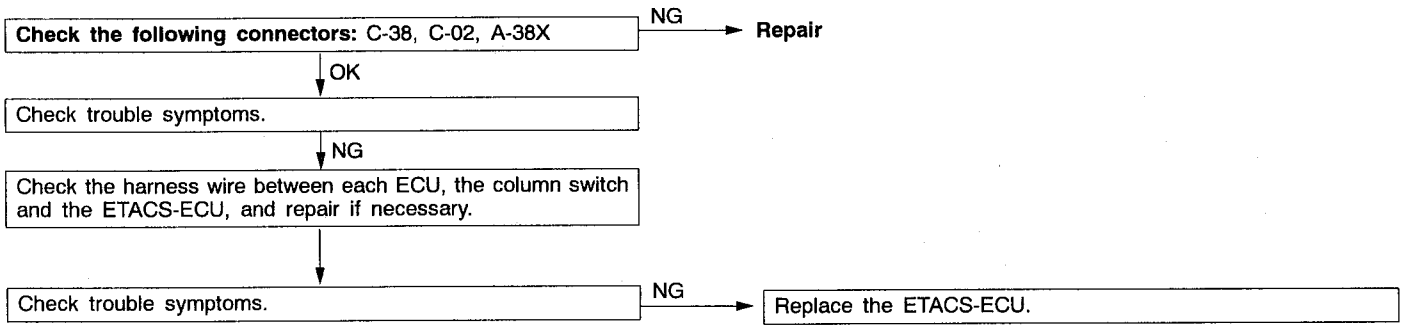

TROUBLE SYMPTOM CHART

Trouble symptom	Inspection procedure No.	Reference page
Communication with the MUT-II is impossible.	1	54-78

TROUBLE SYMPTOM INSPECTION PROCEDURES

Inspection procedure 1

Communication with the MUT-II is impossible.	Probable cause
Power supply or earth circuit for the ETACS-ECU can be defective.	• Malfunction of the harness and connector • Malfunction of the ETACS-ECU

